Course – TFC

Course Instructor

Dr. Umadevi V

Department of CSE, BMSCE

Webpage:https://sites.google.com/site/drvumadevi/

Unit-4

Pushdown Automata

Definition of the Pushdown Automaton, The Languages of a PDA, Equivalence of PDA's and CFG's , Deterministic Pushdown Automata,

The Pumping Lemma for Context Free Languages, Closure Properties of Context Free Languages

Push Down Automata (PDA)

Pushdown Automata is a finite **automata** with extra memory called **stack** which helps Pushdown automata to **recognize Context Free Languages**.

Schematic Representation of PDA

Rough Slide

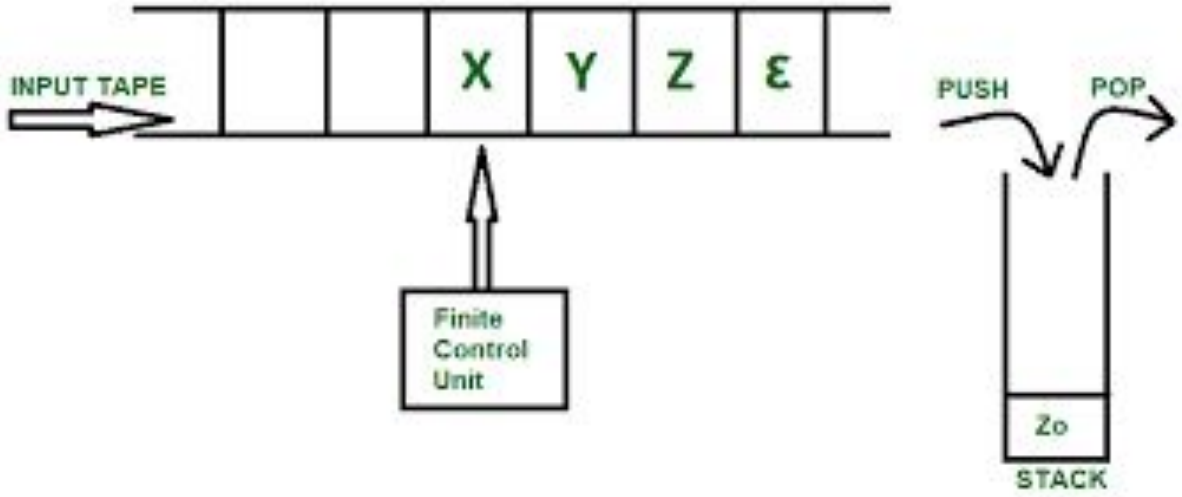

Schematic Representation of PDA
Rough Slide

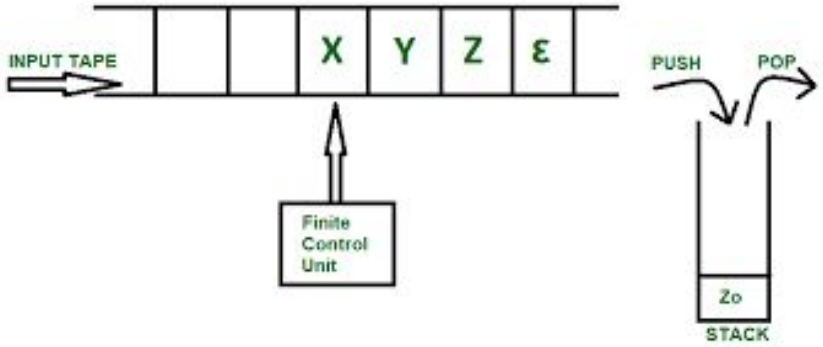

- Example: L={$a^n b^n$, n>=1}
- Valid String "aabb"

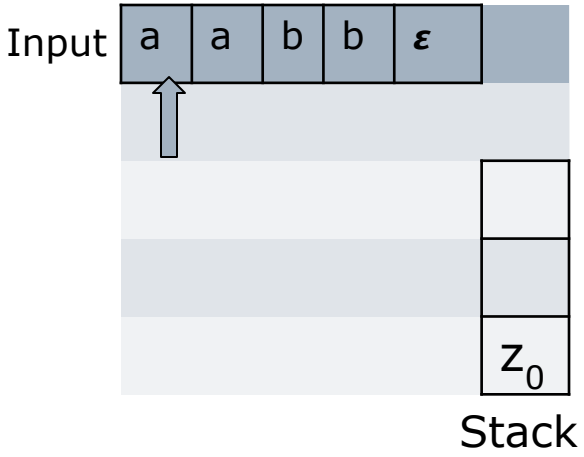

Schematic Representation of PDA
Rough Slide

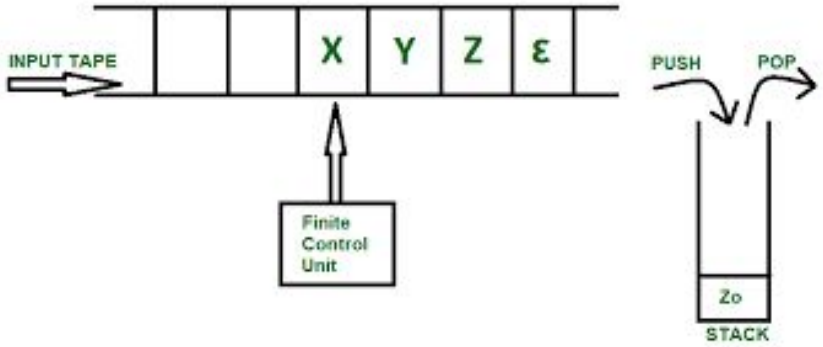

- Example: $L=\{a^n b^n, n>=1\}$
- Valid String "aabb"

Invalid String "aabbb"

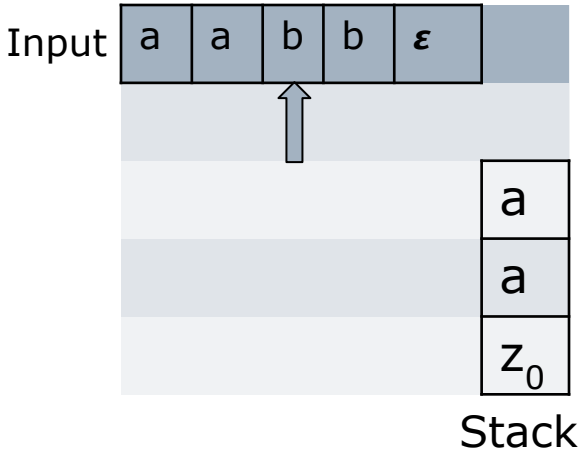

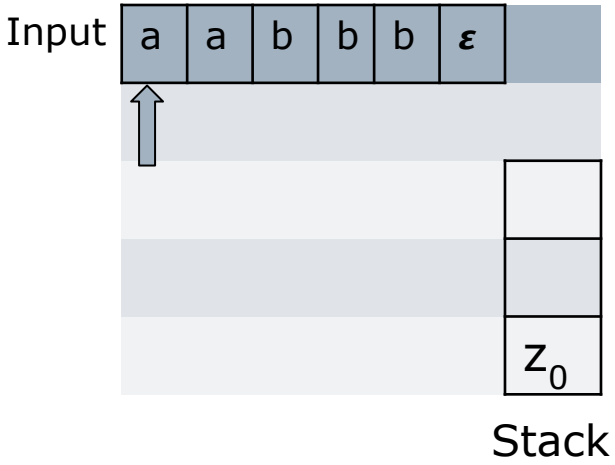

Schematic Representation of PDA

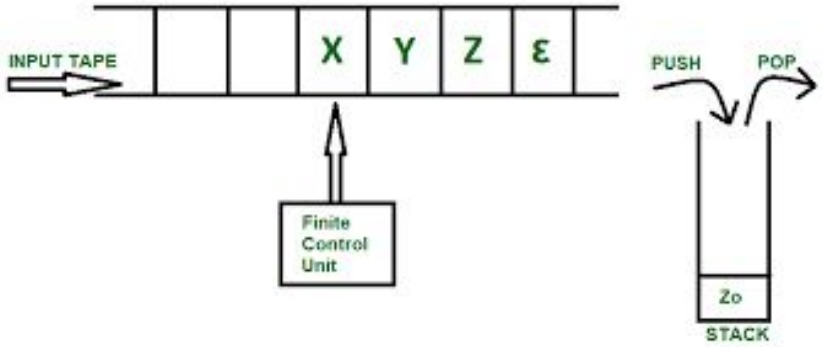

- Example: L={$a^n b^n$, n>=1}
- Valid String "aabb"

Invalid String "aabbb"

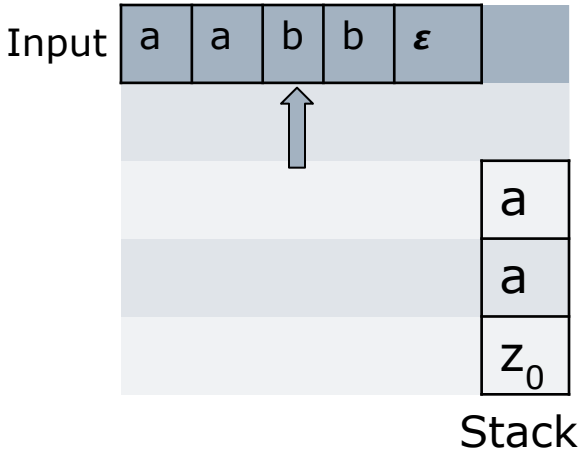

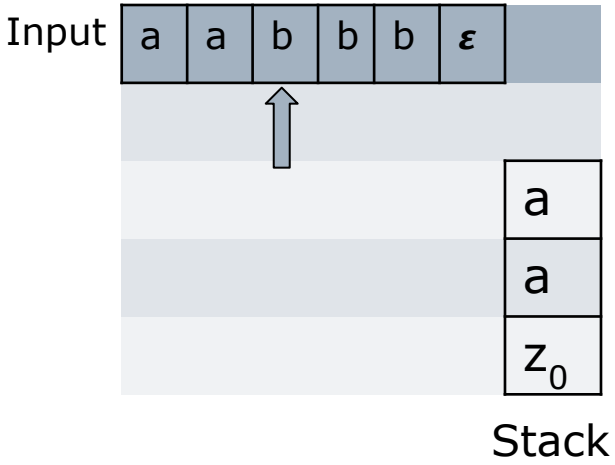

Formal Definition of PDA

$P=(Q, \Sigma, \Gamma, q_0, Z_0, \delta, F)$

- Q is the set of **states**
- Σ is the set of **input alphabet**
- Γ is the set of symbols called **stack alphabet**
- $q_0 \in Q$, is the initial state
- $Z_0 \in \Gamma$, is the initial symbol on the stack
- F is the set of final states
- δ is a transition function which maps $Q \times \{\Sigma \cup \boldsymbol{\varepsilon}\} \times \Gamma$ into $Q \times \Gamma^*$. In a given state, PDA will read input symbol and stack symbol (top of the stack) and move to a new state and change the symbol of stack.

δ(State, Input Symbol, Stack Symbol)=(Next State, Stack Symbol)

Classification of Push Down Automata

1. Deterministic Push Down Automata (DPDA)
2. Non-Deterministic Push Down Automata (NPDA)

Note: Unlike Finite Automata, DPDA and NPDA are not equivalent. For example, the language

$L=\{WW^R, W \in (a+b)^*)\}$ is accepted by NPDA but not by any DPDA

Two ways a PDA accept the language

There are two ways a PDA can accept the language:

a. **Empty Stack:** If a sentence in a language causes PDA to empty its stack then the sentence is accepted.

b. **Final State:** If a sentence in a language causes PDA to move to a state which is member of a set of final states, then the sentence is accepted.

Question

Construct PDA (or DPDA) to recognize the language $L=\{a^n b^n, n>=1\}$ by empty stack method. Show the moves made by PDA for the string aabb and aaabb

Construct PDA (or DPDA) to recognize the language L={$a^n b^n$, n>=1} by empty stack method. Show the moves made by PDA for the string aabb and aaabb

States	Stack Top Symbol	Input Symbols		
		a	b	ε
q_0	z_0			
	a			
q_1	z_0			
	a			

Construct PDA (or DPDA) to recognize the language L={$a^n b^n$, n>=1} by empty stack method.

Construct PDA (or DPDA) to recognize the language L={$a^n b^n$, n>=1} by empty stack method. Show the moves made by PDA for the string aabb and aaabb

States	Stack Top Symbol	Input Symbols		
		a	b	**ε**
q_0	z_0	Push **a** q_0	X	X
	a	Push **a** q_0	Pop **a** q_1	X
q_1	z_0	X	X	Pop $\mathbf{z_0}$ q_1
	a	X	Pop **a** q_1	X

Construct PDA (or DPDA) to recognize the language $L=\{a^n b^n, n>=1\}$ by empty stack method.

States	Stack Top Symbol	Input Symbols		
		a	b	ε
q_0	z_0	Push a q_0	X	X
	a	Push a q_0	Pop a q_1	X
q_1	z_0	X	X	Pop Z_0 q_1
	a	X	Pop a q_1	X

Representing PDA as a generalized Transition Diagram

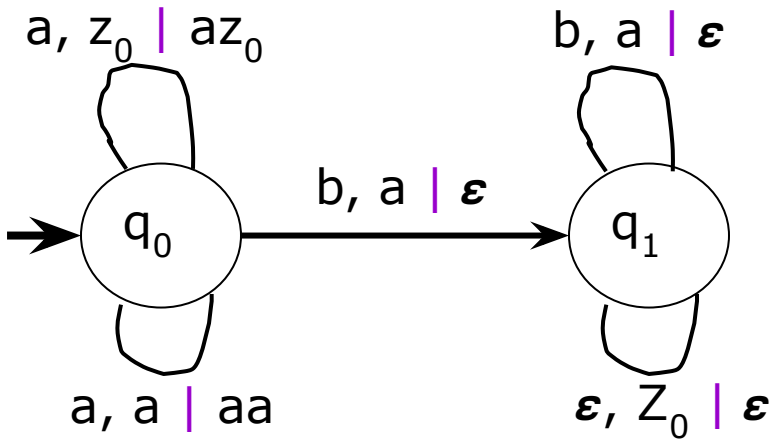

Construct PDA (or DPDA) to recognize the language $L=\{a^n b^n, n>=1\}$ by empty stack method.

States	Stack Top Symbol	Input Symbols		
		a	b	ε
q_0	z_0	Push a q_0	X	X
	a	Push a q_0	Pop a q_1	X
q_1	z_0	X	X	Pop Z_0 q_1
	a	X	Pop a q_1	X

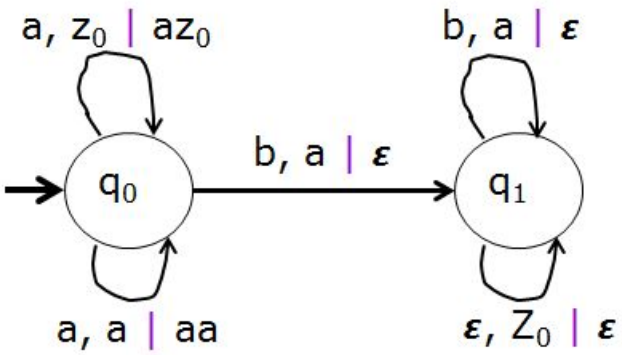

Formal definition of PDA

$P=(Q, \Sigma, \Gamma, q_0, Z_0, \delta, F)$

$Q = \{ q_0, q_1 \}$
$\Sigma = \{a, b\}$
$\Gamma = \{a, Z_0\}$
$q_0 = q_0$
$Z_0 = Z_0$
$F = \{ \}$

$\delta(q_0, a, z_0) = (q_0, az_0)$
$\delta(q_0, a, a) = (q_0, aa)$
} Push Operation

$\delta(q_0, b, a) = (q_1, \varepsilon)$
$\delta(q_1, b, a) = (q_1, \varepsilon)$
$\delta(q_1, \varepsilon, z_0) = (q_1, \varepsilon)$
} Pop Operation

Instantaneous Description of a PDA
Rough Slide

- The current configuration of PDA at any given instant can be described by Instantaneous Description (ID).
- An ID gives current state of PDA, the remaining string to be processed and the entire contents of stack.

Instantaneous Description for the string "aabb"

$(q_0, aabb, z_0)$

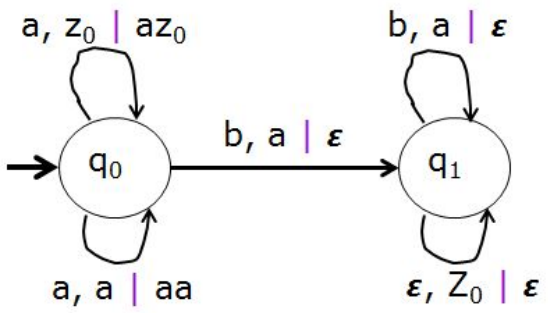

Instantaneous Description of a PDA

- The current configuration of PDA at any given instant can be described by Instantaneous Description (ID).
- An ID gives current state of PDA, the remaining string to be processed and the entire contents of stack.

Instantaneous Description for the string "aabb"

$$
\begin{aligned}
(q_0, aabb, z_0) &\vdash (q_0, abb, az_0) \\
&\vdash (q_0, bb, aaz_0) \\
&\vdash (q_1, b, az_0) \\
&\vdash (q_1, \varepsilon, z_0) \\
&\vdash (q_1, \varepsilon, \varepsilon)
\end{aligned}
$$

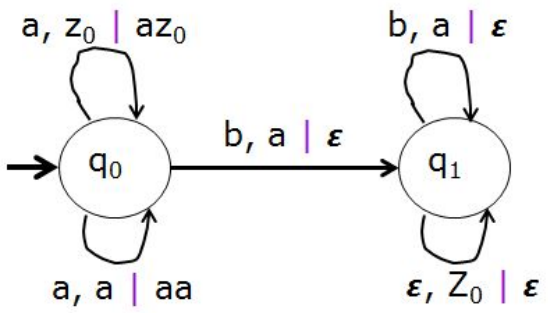

All the Input symbols are read and Stack is empty, therefore the string "aabb" is Accepted.

Instantaneous Description of a PDA
Rough Slide

Instantaneous Description for the string "aaabb"

$(q_0, aaabb, z_0)$

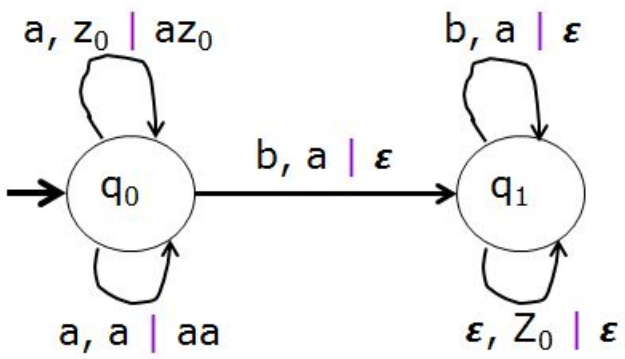

Instantaneous Description of a PDA

Instantaneous Description for the string "aaabb"

$$(q_0, aaabb, z_0) \vdash (q_0, aabb, az_0)$$
$$\vdash (q_0, abb, aaz_0)$$
$$\vdash (q_1, bb, aaaz_0)$$
$$\vdash (q_1, b, aaz_0)$$
$$\vdash (q_1, \varepsilon, az_0)$$

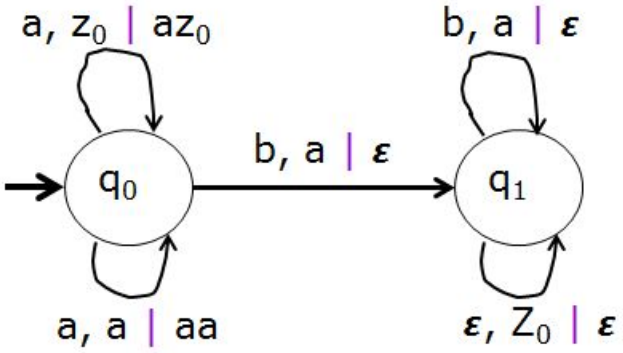

All the Input symbols are read but the Stack is not empty, therefore the string "aaabb" is **not** accepted.

Question

Construct PDA (or DPDA) to recognize the language $L=\{a^n b^{2n}, n>=1\}$ by empty stack method. Give the graphical representation of the PDA obtained. Show the moves made by PDA for the string aabbbb and aabbb

Construct PDA (or DPDA) to recognize the language $L=\{a^n b^{2n}, n>=1\}$ by empty stack method.

Rough Slide

States	Stack Top Symbol	Input Symbols		
		a	b	ε
q_0	z_0			
	a			
q_1	z_0			
	a			

Construct PDA (or DPDA) to recognize the language $L=\{a^n b^{2n}, n>=1\}$ by empty stack method.

States	Stack Top Symbol	Input Symbols		
		a	b	**ε**
q_0	z_0	Push **aa** q_0	X	X
	a	Push **aa** q_0	Pop **a** q_1	X
q_1	z_0	X	X	Pop $\mathbf{z_0}$ q_1
	a	X	Pop **a** q_1	X

Representing PDA as a generalized Transition Diagram

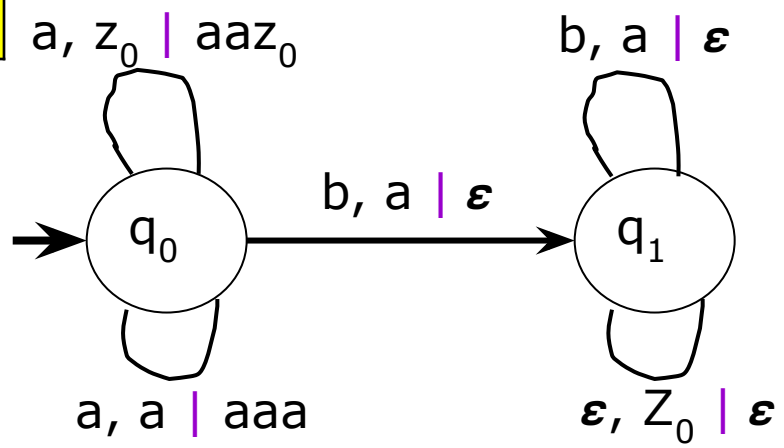

Construct PDA (or DPDA) to recognize the language $L=\{a^n b^{2n}, n>=1\}$ by empty stack method.

States	Stack Top Symbol	Input Symbols		
		a	b	ε
q_0	z_0	Push aa q_0	X	X
	a	Push aa q_0	Pop a q_1	X
q_1	z_0	X	X	Pop Z_0 q_1
	a	X	Pop a q_1	X

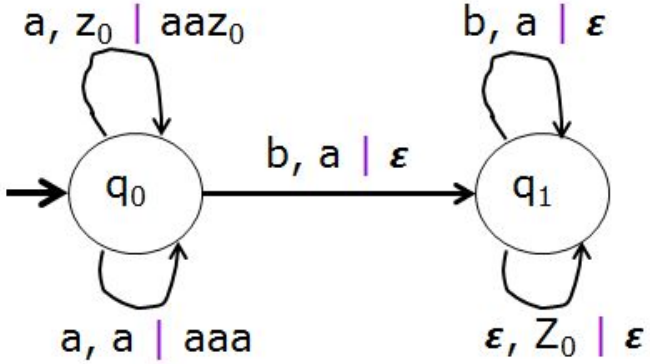

Formal definition of PDA

$P=(Q, \Sigma, \Gamma, q_0, Z_0, \delta, F)$

$Q = \{ q_0, q_1 \}$
$\Sigma = \{a, b\}$
$\Gamma = \{a, Z_0\}$
$q_0 = q_0$
$Z_0 = Z_0$
$F = \{ \}$

$\delta(q_0, a, z_0) = (q_0, aaz_0)$
$\delta(q_0, a, a) = (q_0, aaa)$
} Push Operation

$\delta(q_0, b, a) = (q_1, \varepsilon)$
$\delta(q_1, b, a) = (q_1, \varepsilon)$
$\delta(q_1, \varepsilon, z_0) = (q_1, \varepsilon)$
} Pop Operation

Construct PDA (or DPDA) to recognize the language $L=\{a^n b^{2n}, n>=1\}$ by empty stack method.
Rough Slide

Instantaneous Description for the string "aabbbb"

$(q_0, aabbbb, z_0)$

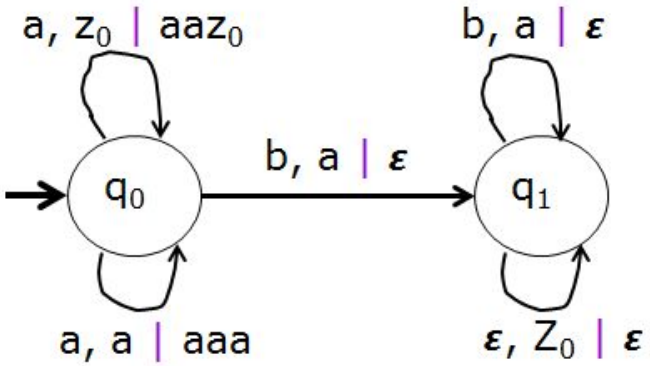

Construct PDA (or DPDA) to recognize the language $L=\{a^n b^{2n}, n>=1\}$ by empty stack method.

Instantaneous Description for the string "aabbbb"

$$(q_0, aabbbb, z_0) \vdash (q_0, abbbb, aaz_0)$$
$$\vdash (q_0, bbbb, aaaaz_0)$$
$$\vdash (q_1, bbb, aaaz_0)$$
$$\vdash (q_1, bb, aaz_0)$$
$$\vdash (q_1, b, az_0)$$
$$\vdash (q_1, \boldsymbol{\varepsilon}, z_0)$$
$$\vdash (q_1, \boldsymbol{\varepsilon}, \boldsymbol{\varepsilon})$$

All the Input symbols are read and Stack is empty, therefore the string "aabbbb" is accepted.

Construct PDA (or DPDA) to recognize the language $L=\{a^n b^{2n}, n>=1\}$ by empty stack method.

Instantaneous Description for the string "aabbb"

$(q_0, aabbb, z_0) \vdash (q_0, abbb, aaz_0)$

$\vdash (q_0, bbb, aaaaz_0)$

$\vdash (q_1, bb, aaaz_0)$

$\vdash (q_1, b, aaz_0)$

$\vdash (q_1, \boldsymbol{\varepsilon}, az_0)$

All the Input symbols are read but Stack not is empty, therefore the string "aabbb" is **not** accepted.

Question

The push down automata indicate the acceptance of input string in terms of

a) Finial state

b) Empty stack

c) Both (a) and (b)

d) None of these

Question

The push down automata indicate the acceptance of input string in terms of

a) Finial state

b) Empty stack

c) **Both (a) and (b)**

d) None of these

Question

The instantaneous description is PDA shows

a) Present state

b) Stack symbol

c) String to be processed

d) All of these

Question

The instantaneous description is PDA shows

a) Present state

b) Stack symbol

c) String to be processed

d) **All of these**

Question

Construct PDA (or DPDA) to recognize the language $L=\{a^{2n}b^{n}, n>=1\}$ by empty stack method. Give the graphical representation of the PDA obtained. Show the moves made by PDA for the string aaaabb and aabbb

Question

Construct PDA (or DPDA) to recognize the language $L=\{a^{2n}b^n, n>=1\}$ by empty stack method. Give the graphical representation of the PDA obtained. Show the moves made by PDA for the string aaaabb and aabbb

Solution:

Logic

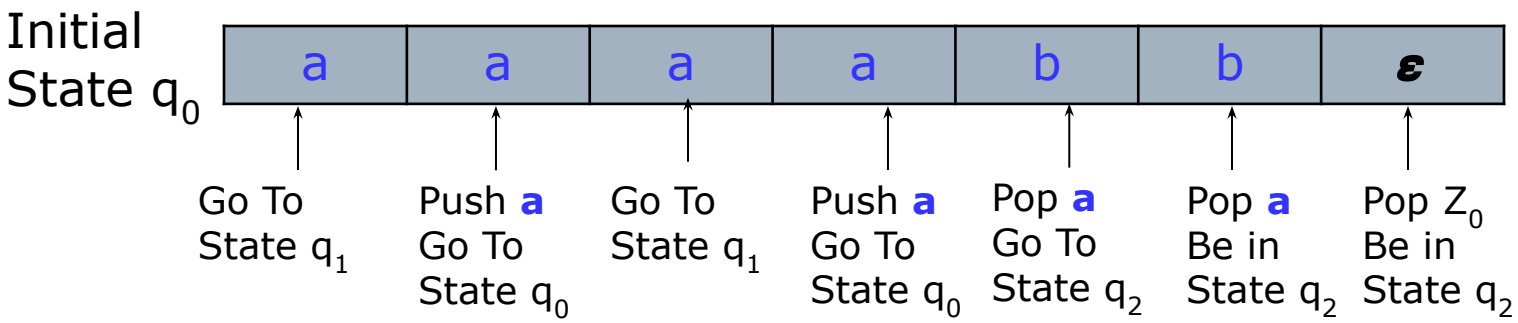

Construct PDA (or DPDA) to recognize the language $L=\{a^{2n}b^{n}, n>=1\}$ by empty stack method.
Rough Slide

States	Stack Top Symbol	Input Symbols		
		a	b	ε
q_0	z_0			
	a			
q_1	z_0			
	a			
q_2	z_0			
	a			

Construct PDA (or DPDA) to recognize the language $L=\{a^{2n}b^n, n>=1\}$ by empty stack method.

States	Stack Top Symbol	Input Symbols		
		a	b	ε
q_0	z_0	q_1	X	X
	a	q_1	Pop a q_2	X
q_1	z_0	Push a q_0	X	X
	a	Push a q_0	X	X
q_2	z_0	X	X	Pop z_0 q_2
	a	X	Pop a q_2	X

Construct PDA (or DPDA) to recognize the language $L=\{a^{2n}b^n, n>=1\}$ by empty stack method.

Representing PDA as a generalized Transition Diagram

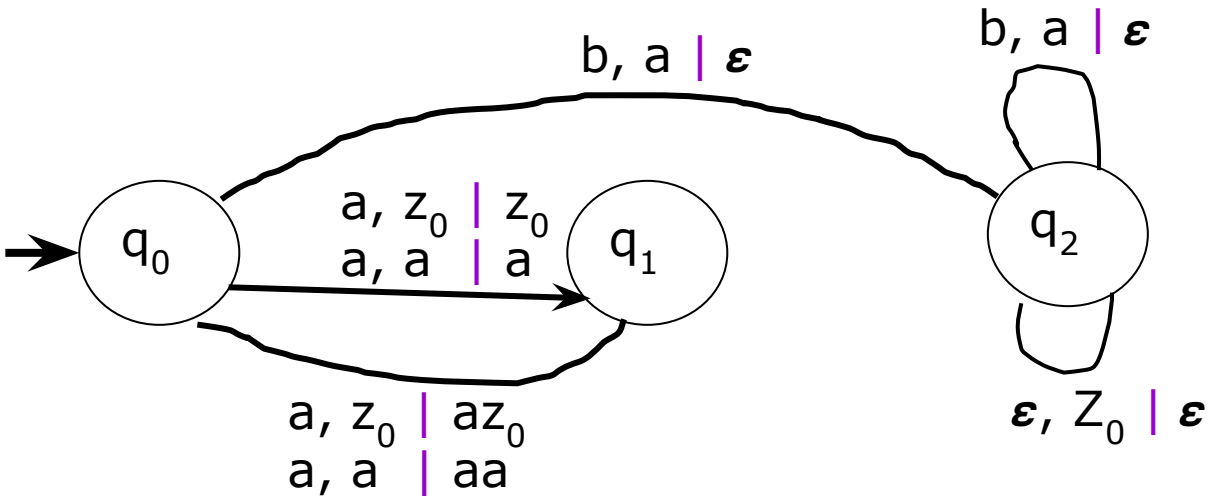

Construct PDA (or DPDA) to recognize the language $L=\{a^{2n}b^n, n>=1\}$ by empty stack method.

$P = (Q, \Sigma, \Gamma, \delta, q_0, z_0, F)$

$Q = \{q_0, q_1, q_2\}$

$\Sigma = \{a, b\}$

$\Gamma = \{z_0, a\}$

q_0 is the start state

z_0 is the initial top symbol

$F = \{\ \}$

$\delta(q_0, a, z_0) = (q_1, z_0)$ } No action

$\delta(q_0, a, a) = (q_1, a)$ }

$\delta(q_0, b, a) = (q_2, \epsilon)$ 1 pop

$\delta(q_1, a, z_0) = (q_0, az_0)$ } Push

$\delta(q_1, a, a) = (q_1, aa)$ }

$\delta(q_2, b, a) = (q_2, \epsilon)$ } Pop

$\delta(q_2, \epsilon, z_0) = (q_3, \epsilon)$

Instantaneous description for the string aaaabb

$(q_0, aaaabb, z_0) \vdash (q_1, aaabb, z_0)$

$\vdash (q_0, aabb, az_0)$

$\vdash (q_1, abb, az_0)$

$\vdash (q_0, bb, aaz_0)$

$\vdash (q_2, b, az_0)$

$\vdash (q_2, \epsilon, z_0)$

$\vdash (q_2, \epsilon, \epsilon)$ Accepted

Question

The push down automata indicate the acceptance of input string in terms of

a) Finial state

b) Empty store

c) Both (a) and (b)

d) None of these

Question

The push down automata indicate the acceptance of input string in terms of

a) Finial state

b) Empty store

c) **Both (a) and (b)**

d) None of these

Question

The instantaneous description is PDA shows

a) Present state

b) Stack symbol

c) String to be processed

d) All of these

Question

The instantaneous description is PDA shows

a) Present state

b) Stack symbol

c) String to be processed

d) **All of these**

Question

Design Deterministic Push Down Automata for the language $L=\{WcW^R, W \in (a+b)^*\}$ by empty stack. Show instantaneous description for the string **aabcbaa**

Example Strings:

c , aca , bcb , aacaa , abcba , abbcbba

Logic: Push **w** on to stack, when c is seen switch to different state, for $\mathbf{w^r}$ do the Popping operation

Design DPDA for the language $L=\{WcW^R, W \in (a+b)^*\}$ by empty stack.

Rough Slide

State	Stack Top Symbol	Input Symbols			
		a	b	c	ε
q_0	Z_0				
	a				
	b				
q_1	Z_0				
	a				
	b				

Design DPDA for the language $L=\{WcW^R, W \in (a+b)^*\}$ by empty stack.

State	Stack Top Symbol	Input Symbols			
		a	b	c	ε
q_0	z_0	Push a q_0	Push b q_0	q_1	X
	a	Push a q_0	Push b q_0	q_1	X
	b	Push a q_0	Push b q_0	q_1	X
q_1	Z_0	X	X	X	Pop Z_0 q_1
	a	Pop a q_1	X	X	X
	b	X	Pop b q_1	X	X

Transition Diagram

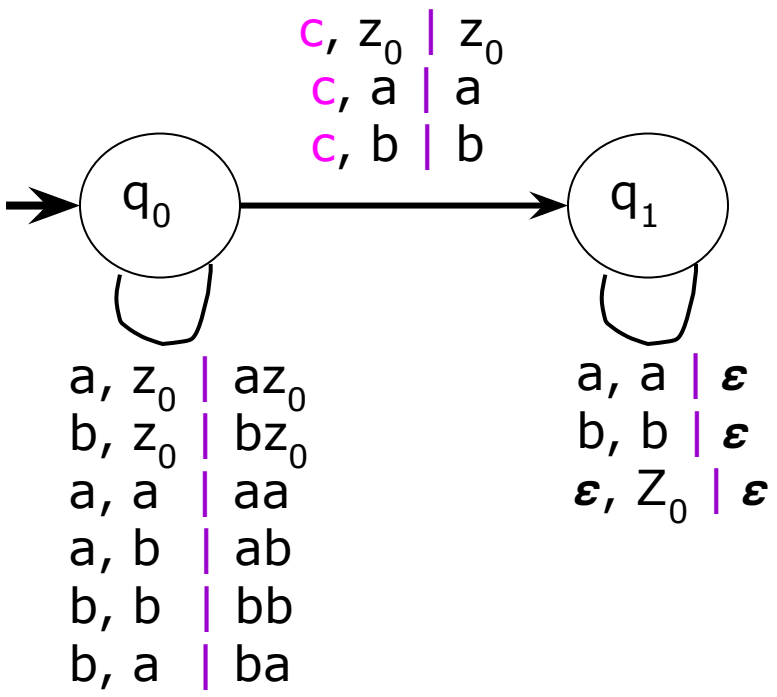

Design DPDA for the language $L=\{WcW^R, W \in (a+b)^*\}$ by empty stack.

State	Stack Top Symbol	Input Symbols			
		a	b	c	ε
q_0	z_0	Push **a** q_0	Push **b** q_0	q_1	X
	a	Push **a** q_0	Push **b** q_0	q_1	X
	b	Push **a** q_0	Push **b** q_0	q_1	X
q_1	Z_0	X	X	X	Pop Z_0 q_1
	a	Pop **a** q_1	X	X	X
	b	X	Pop **b** q_1	X	X

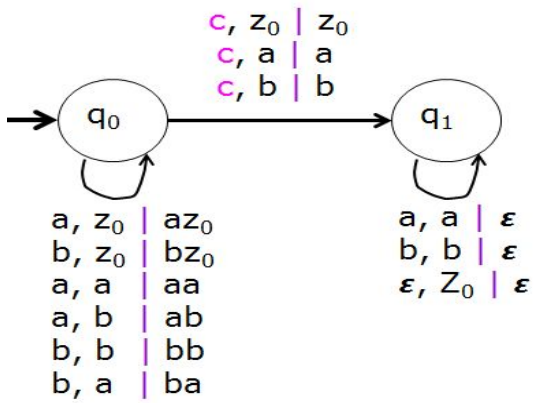

Formal definition of PDA

$P=(Q, \Sigma, \Gamma, q_0, Z_0, \delta, F)$

$Q = \{ q_0, q_1 \}$

$\Sigma = \{a, b, c\}$

$\Gamma = \{a, b, Z_0\}$

$q_0 = q_0$

$Z_0 = Z_0$

$F = \{ \}$

$\delta(q_0, a, z_0) = (q_0, az_0)$
$\delta(q_0, b, z_0) = (q_0, bz_0)$
$\delta(q_0, a, a) = (q_0, aa)$
$\delta(q_0, a, b) = (q_0, ab)$
$\delta(q_0, b, b) = (q_0, bb)$
$\delta(q_0, b, a) = (q_0, ba)$

Push Operation

$\delta(q_0, c, z_0) = (q_1, z_0)$
$\delta(q_0, c, a) = (q_1, a)$
$\delta(q_0, c, b) = (q_1, b)$

No action

$\delta(q_1, a, a) = (q_1, \varepsilon)$
$\delta(q_1, b, b) = (q_1, \varepsilon)$
$\delta(q_1, \varepsilon, z_0) = (q_1, \varepsilon)$

Pop Operation

Design DPDA for the language $L=\{WcW^R, W \in (a+b)^*\}$ by empty stack.
Rough Slide

Instantaneous Description for the string "**aabcbaa**"

$(q_0, aabcbaa, z_0)$

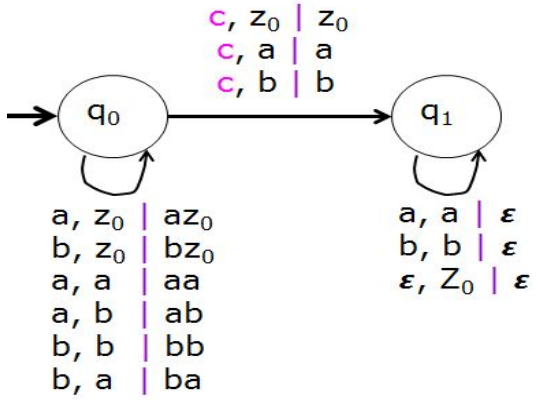

Design DPDA for the language $L=\{WcW^R, W \in (a+b)^*\}$ by empty stack.

Instantaneous Description for the string "**aabcbaa**"

$$(q_0, aabcbaa, z_0) \vdash (q_0, abcbaa, az_0)$$
$$\vdash (q_0, bcbaa, aaz_0)$$
$$\vdash (q_0, cbaa, baaz_0)$$
$$\vdash (q_1, baa, baaz_0)$$
$$\vdash (q_1, aa, aaz_0)$$
$$\vdash (q_1, a, az_0)$$
$$\vdash (q_1, \varepsilon, z_0)$$
$$\vdash (q_1, \varepsilon, \varepsilon)$$

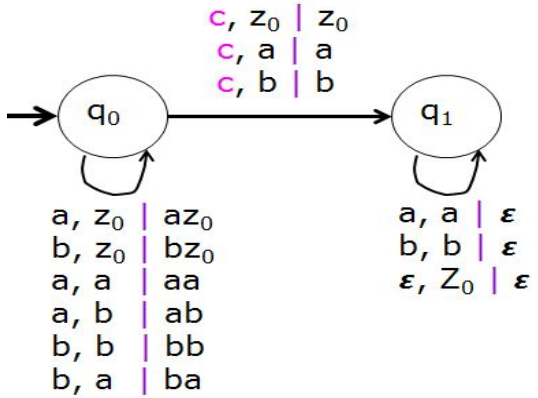

All the Input symbols are read and Stack is empty, therefore the string "aabcbaa" is accepted.

Question

Design Deterministic Push Down Automata for the language L={W, W ∈ (a+b)* and $n_a(w)==n_b(w)$} by empty stack. Show instantaneous description for the string **aababb**

Example Strings:

ab , ba , baba , aabb , baab , aababb

Logic:

Input	Stack Top	Operation
a	Z_0	Push a
b	Z_0	Push b
a	a	Push a
b	a	Pop a
a	b	Pop b
b	b	Push b

Design DPDA for the language L={W, W ∈ (a+b)* and $n_a(w)==n_b(w)$} by empty stack.

Rough Slide

State	Stack Top Symbol	Input Symbols		
		a	b	ε
q_0	Z_0			
	a			
	b			
q_1	Z_0			
	a			
	b			

Design DPDA for the language L={W, W ∈ (a+b)* and $n_a(w)==n_b(w)$} by empty stack.

State	Stack Top Symbol	Input Symbols		
		a	b	**ε**
q_0	z_0	Push **a** q_0	Push **b** q_0	q_1
	a	Push **a** q_0	Pop **a** q_0	X
	b	Pop **b** q_0	Push **b** q_0	X
q_1	Z_0	X	X	Pop $\mathbf{Z_0}$ q_1
	a	X	X	X
	b	X	X	X

Design DPDA for the language L={W, W ∈ (a+b)* and $n_a(w)==n_b(w)$} by empty stack.

Instantaneous Description for the string "**aababb**"

$(q_0, aababb, z_0) \vdash (q_0, ababb, az_0)$

$\vdash (q_0, babb, aaz_0)$

$\vdash (q_0, abb, az_0)$

$\vdash (q_0, bb, aaz_0)$

$\vdash (q_0, b, az_0)$

$\vdash (q_0, \boldsymbol{\varepsilon}, z_0)$

$\vdash (q_1, \boldsymbol{\varepsilon}, z_0)$

$\vdash (q_1, \boldsymbol{\varepsilon}, \boldsymbol{\varepsilon})$

All the Input symbols are read and Stack is empty, therefore the string "aababb" is accepted.

Question

Design Deterministic Push Down Automata for the language L={W, W ∈ (a+b)* and $n_a(w) < n_b(w)$} by final state. Show instantaneous description for the string **abbab**

Example Strings:

b , bb , babab , abbb , bbbaa , abbab

Logic:

Input	Stack Top	Operation
a	Z_0	Push a
b	Z_0	Push b
a	a	Push a
b	a	Pop a
a	b	Pop b
b	b	Push b
ε	**b**	Move to Final State

Design Deterministic Push Down Automata for the language L={W, W ∈ (a+b)* and $n_a(w) < n_b(w)$} by final state.

State	Stack Top Symbol	Input Symbols		
		a	b	**ε**
q_0	z_0	Push **a** q_0	Push **b** q_0	X
	a	Push **a** q_0	Pop **a** q_0	X
	b	Pop **b** q_0	Push **b** q_0	q_1
q_1	Z_0	X	X	X
	a	X	X	X
	b	X	X	q_1

Transition Diagram

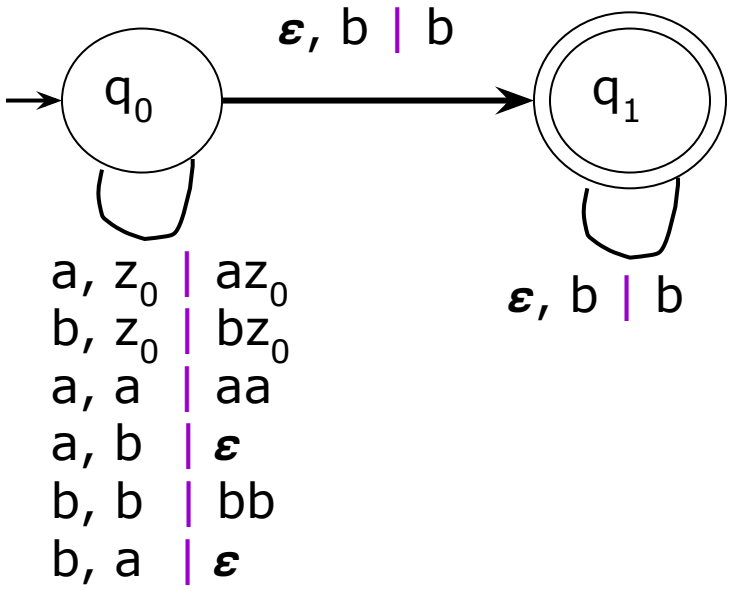

Design Deterministic Push Down Automata for the language L={W, W ∈ (a+b)* and $n_a(w) < n_b(w)$} by final state.

State	Stack Top Symbol	Input Symbols		
		a	b	ε
q_0	z_0	Push a q_0	Push b q_0	X
	a	Push a q_0	Pop a q_0	X
	b	Pop b q_0	Push b q_0	q_1
q_1	Z_0	X	X	X
	a	X	X	X
	b	X	X	q_1

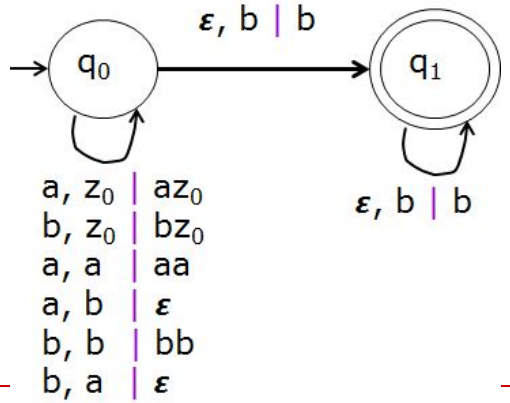

Formal definition of PDA

$P=(Q, \Sigma, \Gamma, q_0, Z_0, \delta, F)$

$Q = \{ q_0, q_1 \}$

$\Sigma = \{a, b\}$

$\Gamma = \{a, b, Z_0\}$

$q_0 = q_0$

$Z_0 = Z_0$

$F = \{q_1\}$

$\delta(q_0, a, z_0) = (q_0, az_0)$
$\delta(q_0, b, z_0) = (q_0, bz_0)$
$\delta(q_0, a, a) = (q_0, aa)$
$\delta(q_0, b, b) = (q_0, bb)$
} Push Operation

$\delta(q_0, a, b) = (q_0, \varepsilon)$
$\delta(q_0, b, a) = (q_0, \varepsilon)$
} Pop Operation

$\delta(q_0, \varepsilon, b) = (q_1, b)$
$\delta(q_1, \varepsilon, b) = (q_1, b)$
} No action

Note: for $n_a(w) > n_b(w)$
$\delta(q_0, \varepsilon, a) = (q_1, a)$
$\delta(q_1, \varepsilon, a) = (q_1, a)$

Design Deterministic Push Down Automata for the language L={W, W ∈ (a+b)* and $n_a(w) < n_b(w)$} by final state.

Instantaneous Description for the string "**abbab**"

$(q_0, abbab, z_0) \vdash (q_0, bbab, az_0)$

$\vdash (q_0, bab, z_0)$

$\vdash (q_0, ab, bz_0)$

$\vdash (q_0, b, z_0)$

$\vdash (q_0, \varepsilon, bz_0)$

$\vdash (q_1, \varepsilon, bz_0)$

$\vdash (q_1, \varepsilon, bz_0)$

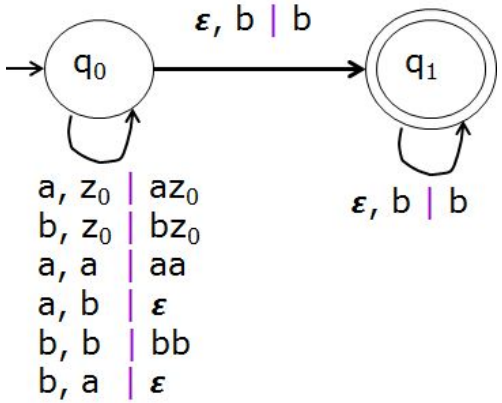

All the Input symbols are read and reached to Final state, therefore the string "abbab" is accepted.

Question

Design Deterministic Push Down Automata for the language $L=\{a^i b^J c^k$, $J=i+k$,$i,k\geq 0\}$ by empty stack. Show instantaneous description for the string **abbbcc**

Example Strings:

i	k	J=i+k	Strings $\mathbf{a^i b^J c^k}$
0	0	0	ε
1	1	2	abbc
1	0	1	ab
0	1	1	bc
2	2	4	aabbbbcc
2	1	3	aabbbc
1	2	3	abbbcc

Question

Design Deterministic Push Down Automata for the language $L=\{a^i b^J c^k$, $J=i+k$,$i,k\geq 0\}$ by empty stack. Show instantaneous description for the string **abbbcc**

Example Strings:

ε , abbc , ab , bc , aabbbbcc , aabbbc , abbbcc

Logic:

$a^i b^J c^k$

⇓

$a^i b^i b^k c^k$

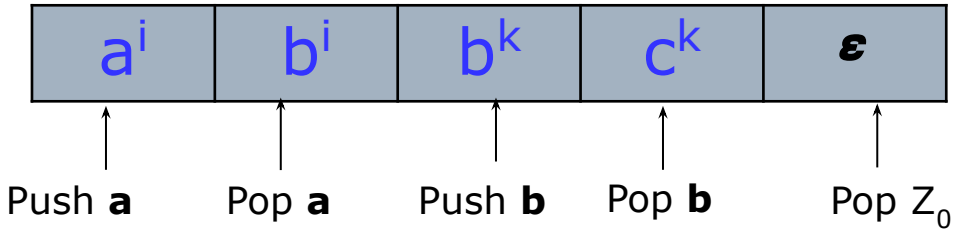

Design Deterministic Push Down Automata for the language $L=\{a^i b^J c^k , J=i+k ,i,k\geq 0\}$ by empty stack.

Rough Slide

State	Stack Top Symbol	Input Symbols			
		a	b	c	ε
q_0	z_0				
	a				
	b				
q_1	Z_0				
	a				
	b				
q2	Z_0				
	a				
	b				
q3	Z_0				
	a				
	b				

Design Deterministic Push Down Automata for the language $L=\{a^i b^J c^k , J=i+k ,i,k\geq 0\}$ by empty stack.

State	Stack Top Symbol	Input Symbols			
		a	b	c	ε
q_0	z_0	Push a , q_0	Push b, q_1	X	q_3
	a	Push a , q_0	Pop a, q_1	X	X
	b	X	X	X	X
q_1	Z_0	X	Push b, q_1	X	X
	a	X	Pop a, q_1	X	X
	b	X	Push b, q_1	Pop b, q_2	X
q2	Z_0	X	X	X	q_3
	a	X	X	X	X
	b	X	X	Pop b, q_2	X
q3	Z_0	X	X	X	Pop z_0, q3
	a	X	X	X	X
	b	X	X	X	X

Design Deterministic Push Down Automata for the language $L=\{a^i b^J c^k$, $J=i+k$,$i,k\geq 0\}$ by empty stack.

Instantaneous Description for the string "**abbbcc**"

$$
\begin{aligned}
(q_0, abbbcc, z_0) &\vdash (q_0, bbbcc, az_0) \\
&\vdash (q_0, bbcc, z_0) \\
&\vdash (q_1, bcc, bz_0) \\
&\vdash (q_1, cc, bbz_0) \\
&\vdash (q_2, c, bz_0) \\
&\vdash (q_2, \boldsymbol{\varepsilon}, z_0) \\
&\vdash (q_3, \boldsymbol{\varepsilon}, z_0) \\
&\vdash (q_3, \boldsymbol{\varepsilon}, \boldsymbol{\varepsilon})
\end{aligned}
$$

All the Input symbols are read and stack is empty, therefore the string "abbbcc" is accepted.

Question

Construct PDA (or DPDA) to recognize the language $L=\{a^n b^n, n>=1\}$ by final state method.

Construct PDA (or DPDA) to recognize the language $L=\{a^n b^n, n>=1\}$ by final state method.

Rough Slide

States	Stack Top Symbol	Input Symbols		
		a	b	ε
q_0	z_0			
	a			
q_1	z_0			
	a			
q_2	z_0			
	a			

Construct PDA to recognize the language $L = \{a^n b^n \mid n \geq 1\}$ by final state Method

States	Stack Top Symbol	Input Symbols		
		a	b	ϵ
q_0	z_0	Push a q_0		
	a	Push a q_0	Pop a q_1	
q_1	z_0			q_2
	a		Pop a q_1	
q_2	z_0			q_2
	a			

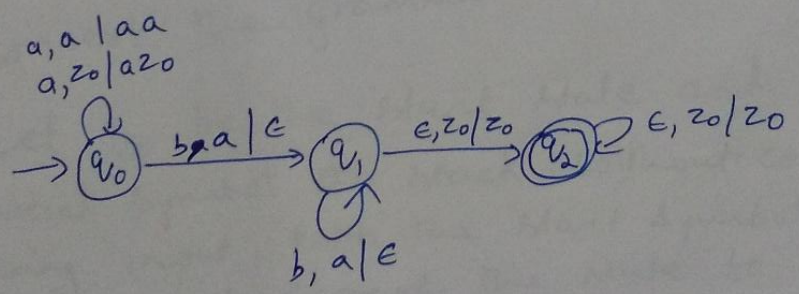

Question

Design Non-deterministic Push Down Automata for the language $L=\{WW^R, W \in (a+b)^*\}$ by empty stack. Show instantaneous description for the string **abba**

or

Design Non-deterministic Push Down Automata for the language $L=\{x, x \in (a+b)^*$ and x is a palindrome$\}$ by empty stack. Show instantaneous description for the string **abba**

Question

Design Non-deterministic Push Down Automata for the language $L=\{WW^R, W \in (a+b)^*\}$ by empty stack. Show instantaneous description for the string **abba**

Example Strings:

ε , aa , bb , aaaa , abaaba , bbaabb , abbbba

Question

Design Non-deterministic Push Down Automata for the language $L=\{WW^R, W \in (a+b)^*\}$ by empty stack. Show instantaneous description for the string **abba**

Example Strings:

ε , aa , bb , aaaa , abaaba , bbaabb

Logic:

Input	Stack Top	Operation
a	Z_0	Push a, q_0
b	Z_0	Push b, q_0
a	a	Push a, q_0 ; Pop a , q_1
b	a	Push b, q_0
a	b	Push a, q_0
b	b	Push b, q_0 ; Pop b, q_1

Design NPDA for the language $L=\{WW^R, W \in (a+b)^*\}$ by empty stack.

Rough Slide

Instantaneous Description for the string "**abba**"

$(q_0, abba, z_0)$

Logic

Input	Stack Top	Operation
a	Z_0	Push a, q_0
b	Z_0	Push b, q_0
a	a	Push a, q_0 ; Pop a , q_1
b	a	Push b, q_0
a	b	Push a, q_0
b	b	Push b, q_0 ; Pop b, q_1
ε	Z_0	Change state to q_2
ε	Z_0	Pop Z_0 , q_2

Design NPDA for the language $L=\{WW^R, W \in (a+b)^*\}$ by empty stack.

Instantaneous Description for the string "**abba**"

$(q_0, abba, z_0) \vdash (q_0, bba, az_0)$

$\vdash (q_0, ba, baz_0)$

$(q_0, a, bbaz_0)$ → $(q_0, \varepsilon, abbaz_0)$

Rejected

(q_1, a, az_0) → (q_1, ε, z_0) → $(q_1, \varepsilon, \varepsilon)$

Accepted

Logic

Input	Stack Top	Operation
a	Z_0	Push a, q_0
b	Z_0	Push b, q_0
a	a	Push a, q_0 ; Pop a , q_1
b	a	Push b, q_0
a	b	Push a, q_0
b	b	Push b, q_0 ; Pop b, q_1

Design NPDA for the language $L=\{WW^R, W \in (a+b)^*\}$ by empty stack.

Rough Slide

State	Stack Top Symbol	Input Symbols		
		a	b	ε
q_0	Z_0			
	a			
	b			
q_1	Z_0			
	a			
	b			
q_2	Z_0			
	a			
	b			

Design NPDA for the language $L=\{WW^R, W \in (a+b)^*\}$ by empty stack.

State	Stack Top Symbol	Input Symbols		
		a	b	ε
q_0	z_0	Push **a** , q_0	Push **b** , q_0	q_2
	a	Push **a** , q_0 Pop **a** , q_1	Push **b** , q_0	X
	b	Push **a** , q_0	Push **b** , q_0 Pop **b** , q_1	X
q_1	Z_0	X	X	q_2
	a	Pop **a** , q_1	X	X
	b	X	Pop **b** , q1	X
q_2	Z_0	X	X	Pop $\mathbf{Z_0}$, q_2
	a	X	X	X
	b	X	X	X

Design NPDA for the language $L=\{WW^R, W \in (a+b)^*\}$ by empty stack.

Transition Diagram

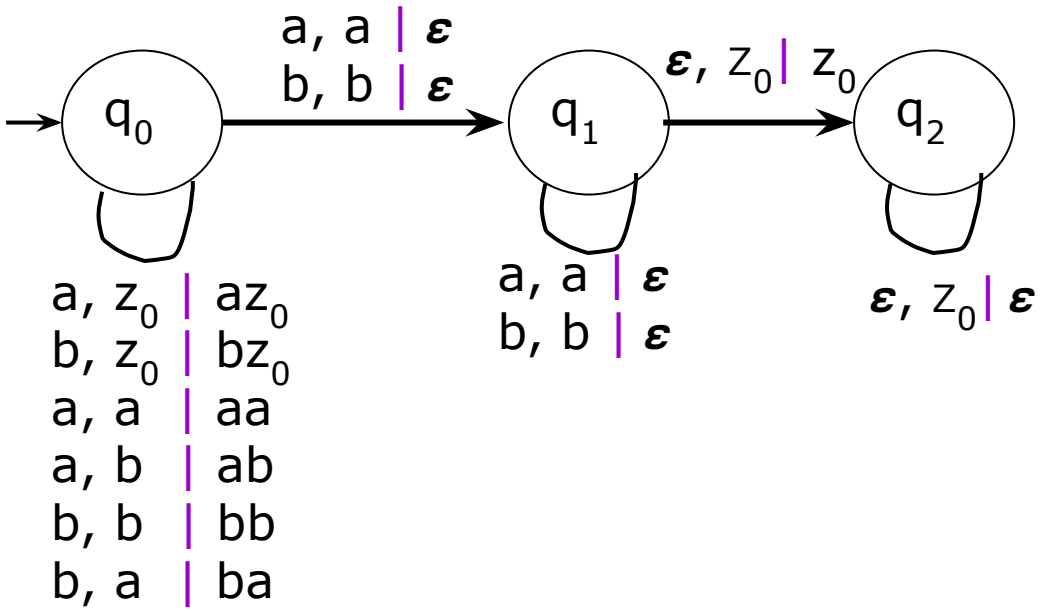

Formal definition of PDA

$P=(Q, \Sigma, \Gamma, q_0, Z_0, \delta, F)$

$Q = \{ q_0, q_1, q_2\}$

$\Sigma = \{a, b\}$

$\Gamma = \{a, b, Z_0\}$

$q_0 = q_0$

$Z_0 = Z_0$

$F = \{ \}$

$\delta(q_0, a, z_0) = (q_0, az_0)$

$\delta(q_0, b, z_0) = (q_0, bz_0)$

$\delta(q_0, a, b) = \{(q_0, ab)$

$\delta(q_0, b, a) = \{(q_0, ba)$

$\delta(q_0, a, a) = \{(q_0, aa), (q_1, \varepsilon)\}$

$\delta(q_0, b, b) = \{(q_0, bb), (q_1, \varepsilon)\}$

$\delta(q_1, a, a) = (q_1, \varepsilon)$

$\delta(q_1, b, b) = (q_1, \varepsilon)$

$\delta(q_1, \varepsilon, z_0) = (q_2, Z_0)$

$\delta(q_2, \varepsilon, z_0) = (q_2, \varepsilon)$

Equivalence of PDA and CFG

- Converting CFG to PDA
- Converting PDA to CFG

Procedure for converting PDA to CFG

1. The input symbols of PDA will be the terminals of CFG

2. If PDA moves from state $\mathbf{q_i}$ to $\mathbf{q_j}$ on consuming the input **a** $\in \Sigma$ when **Z** is top of the stack, then the non-terminals of CFG are the triplets of the form (q_iZq_j)

3. If $\mathbf{q_0}$ is the start state and $\mathbf{q_f}$ is the final state then (q_0Zq_f) is the start symbol of the CFG

4. The productions of CFG can be obtained from the transitions of PDA as shown below:

a. For each transition of the form $\boldsymbol{\delta}(q_i, \mathbf{a}, Z) = (q_j, AB)$ introduce the productions of the form

   $(q_iZq_k) \rightarrow a(q_jAq_l)(q_lBq_k)$ where q_k and q_l will take all possible values from Q

a. For each transition of the form $\boldsymbol{\delta}(q_i, a, Z) = (q_j, \boldsymbol{\varepsilon})$ introduce the production $(q_iZq_j) \rightarrow a$

Note: Using this procedure, we may introduce lot of useless symbols, which in any way can be eliminated.

Question

Obtain CFG that generates the language accepted by the PDA

$P=(Q, \Sigma, \Gamma, q_0, Z_0, \delta, F)$
$Q = \{ q_0, q_1 \}$
$\Sigma = \{a, b\}$
$\Gamma = \{A, Z\}$
$q_0 = q_0$
$Z_0 = Z$
$F = \{q_1\}$
$\delta(q_0, a, Z)=(q_0, AZ)$
$\delta(q_0, b, A)=(q_0, AA)$
$\delta(q_0, a, A)=(q_1, \varepsilon)$

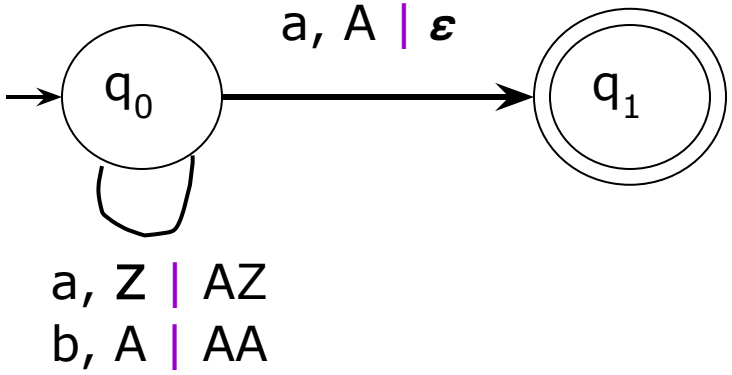

Obtain CFG that generates the language accepted by the PDA $M=(\{q_0, q_1\}, \{a, b\}, \{A, Z\}, q_0, Z, \{q_1\}$,

$\{ \delta(q_0, a, Z)=(q_0, AZ),$

$\delta(q_0, b, A)=(q_0, AA),$

$\delta(q_0, a, A)=(q_1, \varepsilon))$

Solution:

For δ of the form $\delta(q_i, a, Z) = (q_j, \varepsilon)$	Resulting Production $(q_i Z q_j) \rightarrow a$
$\delta(q_0, a, A)=(q_1, \varepsilon)$	$(q_0 A q_1) \rightarrow a$

Solution (Contd…):

For δ of the form $\delta(q_i, a, Z) = (q_j, AB)$	Resulting Production $(q_iZq_k) \rightarrow a(q_jAq_l)(q_lBq_k)$ where q_k and q_l will take all possible values from Q
$\delta(q_0, a, Z)=(q_0, AZ)$	$(q_0Zq_0) \rightarrow a(q_0Aq_0)(q_0Zq_0) \mid a(q_0Aq_1)(q_1Zq_0)$ $(q_0Zq_1) \rightarrow a(q_0Aq_0)(q_0Zq_1) \mid a(q_0Aq_1)(q_1Zq_1)$

Obtain CFG that generates the language accepted by the PDA $M=(\{q_0, q_1\}, \{a, b\}, \{A, Z\}, q_0, Z, \{q_1\}, \{\delta(q_0, a, Z)=(q_0, AZ), \delta(q_0, b, A)=(q_0, AA), \delta(q_0, a, A)=(q_1, \varepsilon))$

Solution (Contd…):

For δ of the form $\delta(q_i, a, Z) = (q_j, AB)$	Resulting Production $(q_iZq_k) \rightarrow a(q_jAq_l)(q_lBq_k)$ where q_k and q_l will take all possible values from Q
$\delta(q_0, a, Z)=(q_0, AZ)$	$(q_0Zq_0) \rightarrow a(q_0Aq_0)(q_0Zq_0) \mid a(q_0Aq_1)(q_1Zq_0)$ $(q_0Zq_1) \rightarrow a(q_0Aq_0)(q_0Zq_1) \mid a(q_0Aq_1)(q_1Zq_1)$
$\delta(q_0, b, A)=(q_0, AA)$	$(q_0Aq_0) \rightarrow b(q_0Aq_0)(q_0Aq_0) \mid b(q_0Aq_1)(q_1Aq_0)$ $(q_0Aq_1) \rightarrow b(q_0Aq_0)(q_0Aq_1) \mid b(q_0Aq_1)(q_1Aq_1)$

Start Symbol of the grammar is (q_0Zq_1)

Obtain CFG that generates the language accepted by the PDA $M=(\{q_0, q_1\}, \{a, b\}, \{A, Z\}, q_0, Z, \{q_1\}, \{\delta(q_0, a, Z)=(q_0, AZ), \delta(q_0, b, A)=(q_0, AA), \delta(q_0, a, A)=(q_1, \varepsilon))$

Solution (Contd…):

$G=(V, T, P, S)$

$V= \{(q_0Zq_1), (q_0Aq_1), (q_0Zq_0), (q_0Aq_0),$
$(q_1Zq_0), (q_1Zq_1), (q_1Aq_0), (q_1Aq_1)\}$

$T=\{a, b\}$

$P=\{$

$(q_0Aq_1) \rightarrow a$
$(q_0Zq_0) \rightarrow a(q_0Aq_0)(q_0Zq_0) \mid a(q_0Aq_1)(q_1Zq_0)$
$(q_0Zq_1) \rightarrow a(q_0Aq_0)(q_0Zq_1) \mid a(q_0Aq_1)(q_1Zq_1)$
$(q_0Aq_0) \rightarrow b(q_0Aq_0)(q_0Aq_0) \mid b(q_0Aq_1)(q_1Aq_0)$
$(q_0Aq_1) \rightarrow b(q_0Aq_0)(q_0Aq_1) \mid b(q_0Aq_1)(q_1Aq_1)$

$\}$

$S=(q_0Zq_1)$

Question

Obtain CFG that generates the language accepted by the PDA

$P=(Q, \Sigma, \Gamma, q_0, Z_0, \delta, F)$
$Q = \{ q_0, q_1, q_2 \}$
$\Sigma = \{a, b\}$
$\Gamma = \{A, Z\}$
$q_0 = q_0$
$Z_0 = Z$
$F = \{q_2\}$
$\delta(q_0, a, Z)=(q_0, AZ)$
$\delta(q_0, a, A)=(q_0, A)$
$\delta(q_0, b, A)=(q_1, \boldsymbol{\varepsilon})$
$\delta(q_1, \boldsymbol{\varepsilon}, Z)=(q_2, \boldsymbol{\varepsilon})$

Converting PDA to CFG: $M=(\{ q_0 , q_1 , q_2 \}, \{a, b\} , \{A, Z\}, q_0 , Z, \{q_2\}, \{$
$\delta(q_0 , a, Z)=(q_0, AZ), \delta(q_0 , a, A)=(q_0, A), \delta(q_0 , b, A)=(q_1, \varepsilon), \delta(q_0 , \varepsilon, Z)=(q_2, \varepsilon)\}$

Solution:

To obtain CFG from the PDA, all transitions should be of the form

$\boldsymbol{\delta}(q_i , \mathbf{a}, Z) = (q_j, AB)$

or

$\delta(q_i , a, Z) = (q_j, \boldsymbol{\varepsilon})$

In the given transitions except the second transition, all transitions are in the required form. So, let us take the second transition

$\delta(q_0 , a, A)=(q_0, A)$

This transition indicates that when input symbol **a** is encountered and top stack symbol is A, the PDA remains in the state q_0 and contents of the stack are not altered. This can be interpreted as delete A from stack and insert A onto the stack. So once A is deleted from the stack we enter into a new state q_3. But in state q_3 without consuming any input we add A onto the stack. The corresponding transitions are

$\delta(q_0 , a, A)=(q_3, \varepsilon)$

$\delta(q_3 , \varepsilon, Z)=(q_0, AZ)$

Converting PDA to CFG: $M=(\{ q_0 , q_1 , q_2 \}, \{a, b\} , \{A, Z\}, q_0 , Z, \{q_2\}, \{$
$\delta(q_0 , a, Z)=(q_0, AZ), \delta(q_0 , a, A)=(q_0, A), \delta(q_0 , b, A)=(q_1, \varepsilon), \delta(q_1 , \varepsilon, Z)=(q_2, \varepsilon)\}$

Solution (Contd…):

So the given PDA can be written using the following transitions

$\delta(q_0 , a, Z)=(q_0, AZ)$

$\delta(q_0 , a, A)=(q_3, \varepsilon)$

$\delta(q_3 , \varepsilon, Z)=(q_0, AZ)$

$\delta(q_0 , b, A)=(q_1, \varepsilon)$

$\delta(q_1 , \varepsilon, Z)=(q_2, \varepsilon)$

For δ of the form $\delta(q_i , a, Z) = (q_j, \varepsilon)$	Resulting Production $(q_iZq_j) \rightarrow a$
$\delta(q_0 , a, A)=(q_3, \varepsilon)$	$(q_0Aq_3)\rightarrow a$
$\delta(q_0 , b, A)=(q_1, \varepsilon)$	$(q_0Aq_1) \rightarrow b$
$\delta(q_1 , \varepsilon, Z)=(q_2, \varepsilon)$	$(q_1Zq_2) \rightarrow \varepsilon$

Solution (Contd…):

So the given PDA can be written using the following transitions

$\delta(q_0, a, Z)=(q_0, AZ)$, $\delta(q_0, a, A)=(q_3, \varepsilon)$, $\delta(q_3, \varepsilon, Z)=(q_0, AZ)$

$\delta(q_0, b, A)=(q_1, \varepsilon)$, $\delta(q_1, \varepsilon, Z)=(q_2, \varepsilon)$

For δ of the form $\delta(q_i, a, Z) = (q_j, AB)$	Resulting Production $(q_iZq_k) \rightarrow a(q_jAq_l)(q_lBq_k)$ where q_k and q_l will take all possible values from Q
$\delta(q_0, a, Z)=(q_0, AZ)$	$(q_0Zq_0) \rightarrow a(q_0Aq_0)(q_0Zq_0) \mid a(q_0Aq_1)(q_1Zq_0) \mid a(q_0Aq_2)(q_2Zq_0) \mid a(q_0Aq_3)(q_3Zq_0)$ $(q_0Zq_1) \rightarrow a(q_0Aq_0)(q_0Zq_1) \mid a(q_0Aq_1)(q_1Zq_1) \mid a(q_0Aq_2)(q_2Zq_1) \mid a(q_0Aq_3)(q_3Zq_1)$ $(q_0Zq_2) \rightarrow a(q_0Aq_0)(q_0Zq_2) \mid a(q_0Aq_1)(q_1Zq_2) \mid a(q_0Aq_2)(q_2Zq_2) \mid a(q_0Aq_3)(q_3Zq_2)$ $(q_0Zq_3) \rightarrow a(q_0Aq_0)(q_0Zq_3) \mid a(q_0Aq_1)(q_1Zq_3) \mid a(q_0Aq_2)(q_2Zq_3) \mid a(q_0Aq_3)(q_3Zq_3)$

Solution (Contd…):

So the given PDA can be written using the following transitions

$\delta(q_0, a, Z)=(q_0, AZ)$, $\delta(q_0, a, A)=(q_3, \varepsilon)$, $\delta(q_3, \varepsilon, Z)=(q_0, AZ)$

$\delta(q_0, b, A)=(q_1, \varepsilon)$, $\delta(q_1, \varepsilon, Z)=(q_2, \varepsilon)$

For δ of the form $\delta(q_i, a, Z) = (q_j, AB)$	Resulting Production $(q_iZq_k) \rightarrow a(q_lAq_l)(q_lBq_k)$ where q_k and q_l will take all possible values from Q
$\delta(q_3, \varepsilon, Z)=(q_0, AZ)$	$(q_3Zq_0) \rightarrow (q_0Aq_0)(q_0Zq_0) \mid (q_0Aq_1)(q_1Zq_0) \mid (q_0Aq_2)(q_2Zq_0) \mid (q_0Aq_3)(q_3Zq_0)$ $(q_3Zq_1) \rightarrow (q_0Aq_0)(q_0Zq_1) \mid (q_0Aq_1)(q_1Zq_1) \mid (q_0Aq_2)(q_2Zq_1) \mid (q_0Aq_3)(q_3Zq_1)$ $(q_3Zq_2) \rightarrow (q_0Aq_0)(q_0Zq_2) \mid (q_0Aq_1)(q_1Zq_2) \mid (q_0Aq_2)(q_2Zq_2) \mid (q_0Aq_3)(q_3Zq_2)$ $(q_3Zq_3) \rightarrow (q_0Aq_0)(q_0Zq_3) \mid (q_0Aq_1)(q_1Zq_3) \mid (q_0Aq_2)(q_2Zq_3) \mid (q_0Aq_3)(q_3Zq_3)$

Start Symbol of the grammar is (q_0Zq_2)

Obtain a CFG for the PDA shown below

$\delta(q_0, a, Z) = (q_0, AZ)$

$\delta(q_0, a, A) = (q_0, A)$

$\delta(q_0, b, A) = (q_1, \epsilon)$

$\delta(q_1, \epsilon, Z) = (q_2, \epsilon)$ q_2 is final state

Soln: To obtain CFG from the PDA, all transitions should be of the form

$\delta(q_i, a, Z) = (q_j, AB)$ (or) $\delta(q_i, a, Z) = (q_j, \epsilon)$

In the given transitions except the second transition, all transitions are in the required form. So, let us take the second transition

$\delta(q_0, a, A) = (q_0, A)$

This transition indicates that when input symbol a is encountered and top of the ~~stack~~ stack is A, the PDA remains in state q_0 and contents of the stack are not altered. This can be interpreted as delete A from the stack and insert A onto the stack. So once A is deleted from the stack we enter into new state q_3. But in state q_3 without consuming any input we add A onto the stack. The corresponding transitions are

$\delta(q_0, a, A) = (q_3, \epsilon)$

$\delta(q_3, \epsilon, Z) = (q_0, AZ)$

So, the given PDA can be written using the following transitions

$\delta(q_0, a, Z) = (q_0, AZ)$

$\delta(q_0, a, A) = (q_3, \epsilon)$

$\delta(q_3, \epsilon, Z) = (q_0, AZ)$

$\delta(q_0, b, A) = (q_1, \epsilon)$

$\delta(q_1, \epsilon, Z) = (q_2, \epsilon)$

For δ of the form	Resulting Production
$\delta(q_i, a, Z) = (q_j, \epsilon)$	$(q_i Z q_j) \rightarrow a$
$\delta(q_0, a, A) = (q_3, \epsilon)$	$(q_0 A q_3) \rightarrow a$
$\delta(q_0, b, A) = (q_1, \epsilon)$	$(q_0 A q_1) \rightarrow b$
$\delta(q_1, \epsilon, Z) = (q_2, \epsilon)$	$(q_1 Z q_2) \rightarrow \epsilon$

For δ of the form	Resulting Production
$\delta(q_i, a, Z) = (q_j, AB)$	$(q_i Z q_k) \rightarrow a(q_j A q_l)(q_l B q_k)$
$\delta(q_0, a, Z) = (q_0, AZ)$	$(q_0 Z q_0) \rightarrow a(q_0 A q_0)(q_0 Z q_0) \mid$ $a(q_0 A q_1)(q_1 Z q_0) \mid$ $a(q_0 A q_2)(q_2 Z q_0) \mid$ $a(q_0 A q_3)(q_3 Z q_0)$ $(q_0 Z q_1) \rightarrow a(q_0 A q_0)(q_0 Z q_1) \mid$ $a(q_0 A q_1)(q_1 Z q_1) \mid$ $a(q_0 A q_2)(q_2 Z q_1) \mid$ $a(q_0 A q_3)(q_3 Z q_1)$ $(q_0 Z q_2) \rightarrow a(q_0 A q_0)(q_0 Z q_2) \mid$ $a(q_0 A q_1)(q_1 Z q_2) \mid$ $a(q_0 A q_2)(q_2 Z q_2) \mid$ $a(q_0 A q_3)(q_3 Z q_2)$

For δ of the form	Resulting Production
$\delta(q_i, a, Z) = (q_j, AB)$	$(q_i Z q_k) \rightarrow a(q_j A q_l)(q_l B q_k)$
	$(q_0 Z q_3) \rightarrow a(q_0 A q_0)(q_0 Z q_3) \mid$ $a(q_0 A q_1)(q_1 Z q_3) \mid$ $a(q_0 A q_2)(q_2 Z q_3) \mid$ $a(q_0 A q_3)(q_3 Z q_3)$
$\delta(q_3, \epsilon, Z) = (q_0, AZ)$	$(q_3 Z q_0) \rightarrow (q_0 A q_0)(q_0 Z q_0) \mid$ $(q_0 A q_1)(q_1 Z q_0) \mid$ $(q_0 A q_2)(q_2 Z q_0) \mid$ $(q_0 A q_3)(q_3 Z q_0)$ $(q_3 Z q_1) \rightarrow (q_0 A q_0)(q_0 Z q_1) \mid$ $(q_0 A q_1)(q_1 Z q_1) \mid$ $(q_0 A q_2)(q_2 Z q_1) \mid$ $(q_0 A q_3)(q_3 Z q_1)$ $(q_3 Z q_2) \rightarrow (q_0 A q_0)(q_0 Z q_2) \mid$ $(q_0 A q_1)(q_1 Z q_2) \mid$ $(q_0 A q_2)(q_2 Z q_2) \mid$ $(q_0 A q_3)(q_3 Z q_2)$ $(q_3 Z q_3) \rightarrow (q_0 A q_0)(q_0 Z q_3) \mid$ $(q_0 A q_1)(q_1 Z q_3) \mid$ $(q_0 A q_2)(q_2 Z q_3) \mid$ $(q_0 A q_3)(q_3 Z q_3)$

The start symbol of the grammar is $(q_0 Z q_2)$

Greibach Normal Form (GNF)

In Greibach Normal Form (GNF), there is a restriction on the terminals and variables appearing on the right hand side of the production.

A CFG G = (V, T, P, S) is said to be in GNF if every production is of the form

$$A \rightarrow a\alpha$$

where $a \in T$ and $\alpha \in V^*$, i.e., α is a string of zero or more variables.

The first symbol on the right hand side of the production must be a terminal and it can be followed by zero or more Variables.

If Grammar is in GNF, it can be easily converted into Push Down Automata (PDA), which accepts Context Free Languages

Procedure for converting CFG to PDA

Given any grammar, first obtain the grammar in GNF (Greibach Normal Form) and then obtain PDA.

The steps to be followed to convert a grammar G=(V,T,P,S) to its equivalent PDA are

1. Convert the grammar to GNF

2. Let $\mathbf{q_0}$ be the start state and $\mathbf{z_0}$ is initial symbol on stack. Without consuming any input, push the start symbol **S** onto the stack and change state to $\mathbf{q_1}$

The transition for this can be $\delta(q_0, \boldsymbol{\varepsilon}, z_0)=(q_1,Sz_0)$

3. For each production of the form A -> a$\boldsymbol{\beta}$ introduce the transition

$\delta(q_1 , a, A)=(q_1, \boldsymbol{\beta})$

4. Finally, in state q_1 , without consuming any input change the state to q_f which is an accepting state. The transition can be of the form $\delta(q_1 , \boldsymbol{\varepsilon}, z_0)=(q_f, \mathbf{z_0})$

Question

Convert following Grammar to PDA. Show the instantaneous description for the string “aabba”

$S \rightarrow aABC$

$A \rightarrow aB \mid a$

$B \rightarrow bA \mid b$

$C \rightarrow a$

Convert following Grammar to PDA.
S → aABC ; A → aB | a ; B → bA | b ; C → a

Solution:

Step1: Convert the grammar to GNF

The given grammar is in GNF

Step2: Let $\mathbf{q_0}$ be the start state and $\mathbf{z_0}$ is initial symbol on stack. Without consuming any input, push the start symbol **S** onto the stack and change state to $\mathbf{q_1}$

The transition for this can be $\delta(q_0, \boldsymbol{\varepsilon}, z_0)=(q_1,Sz_0)$

Convert following Grammar to PDA.
S → aABC ; A → aB | a ; B → bA | b ; C → a
Rough Slide

Solution (Contd…):

Step3: For each production of the form A -> a**β** introduce the transition $\delta(q_1, a, A)=(q_1, \beta)$

Production	Transition
S → a**ABC**	
A → a**B**	
A → a	
B → b**A**	
B → b	
C → a	

Convert following Grammar to PDA.
S → aABC ; A → aB | a ; B → bA | b ; C → a

Solution (Contd…):

Step3: For each production of the form A -> a**β** introduce the transition $\delta(q_1, a, A)=(q_1, \boldsymbol{\beta})$

Production	Transition
S → a**ABC**	$\delta(q_1, a, S)=(q_1, \mathbf{ABC})$
A → a**B**	$\delta(q_1, a, A)=(q_1, \mathbf{B})$
A → a	$\delta(q_1, a, A)=(q_1, \boldsymbol{\varepsilon})$
B → b**A**	$\delta(q_1, b, B)=(q_1, \mathbf{A})$
B → b	$\delta(q_1, b, B)=(q_1, \boldsymbol{\varepsilon})$
C → a	$\delta(q_1, a, C)=(q_1, \boldsymbol{\varepsilon})$

Step4: Finally, in state q_1, without consuming any input change the state to q_f which is an accepting state. The transition can be of the form $\delta(q_1, \boldsymbol{\varepsilon}, z_0)=(q_f, \mathbf{z_0})$

Convert following Grammar to PDA.

S → aABC ; A → aB | a ; B → bA | b ; C → a

Formal definition of PDA

$P=(Q, \Sigma, \Gamma, q_0, Z_0, \delta, F)$

$Q = \{ q_0, q_1, q_f \}$

$\Sigma = \{a, b\}$

$\Gamma = \{S, A, B, C, Z_0\}$

$q_0 = q_0$

$Z_0 = Z_0$

$F = \{q_f\}$

$\delta(q_0, \boldsymbol{\varepsilon}, z_0)=(q_1, Sz_0)$

$\delta(q_1, a, S)=(q_1, \mathbf{ABC})$

$\delta(q_1, a, A)=(q_1, \mathbf{B})$

$\delta(q_1, a, A)=(q_1, \boldsymbol{\varepsilon})$

$\delta(q_1, b, B)=(q_1, \mathbf{A})$

$\delta(q_1, b, B)=(q_1, \boldsymbol{\varepsilon})$

$\delta(q_1, a, C)=(q_1, \boldsymbol{\varepsilon})$

$\delta(q_1, \boldsymbol{\varepsilon}, z_0)=(q_f, \mathbf{z_0})$

Convert following Grammar to PDA.
S → aABC ; A → aB | a ; B → bA | b ; C → a
Rough Slide

Instantaneous Description for the string "**aabba**"

Transitions of PDA

$\delta(q_0, \boldsymbol{\varepsilon}, z_0)=(q_1, Sz_0)$

$\delta(q_1, a, S)=(q_1, \mathbf{ABC})$

$\delta(q_1, a, A)=(q_1, \mathbf{B})$
$\delta(q_1, a, A)=(q_1, \boldsymbol{\varepsilon})$

$\delta(q_1, b, B)=(q_1, \mathbf{A})$
$\delta(q_1, b, B)=(q_1, \boldsymbol{\varepsilon})$

$\delta(q_1, a, C)=(q_1, \boldsymbol{\varepsilon})$

$\delta(q_1, \boldsymbol{\varepsilon}, z_0)=(q_f, \mathbf{z_0})$

Convert following Grammar to PDA.

S → aABC ; A → aB | a ; B → bA | b ; C → a

Instantaneous Description for the string "**aabba**"

$(q_0, aabba, z_0) \vdash (q_1, aabba, Sz_0)$

$\vdash (q_1, abba, ABCz_0)$

$(q_1, bba, BBCz_0)$ (q_1, bba, BCz_0)

(q_1, ba, BCz_0) $(q_1, ba, ABCz_0)$

(q_1, a, Cz_0) (q_1, a, ACz_0)

$\downarrow$

$(q_1, \boldsymbol{\varepsilon}, z_0)$

$\downarrow$

$(q_f, \boldsymbol{\varepsilon}, z_0)$ Accepted

All Input Symbols are read and the final state is reached, therefore the string "aabba" is accepted

Transitions of PDA

$\delta(q_0, \boldsymbol{\varepsilon}, z_0)=(q_1, Sz_0)$

$\delta(q_1, a, S)=(q_1, \mathbf{ABC})$

$\delta(q_1, a, A)=(q_1, \mathbf{B})$

$\delta(q_1, a, A)=(q_1, \boldsymbol{\varepsilon})$

$\delta(q_1, b, B)=(q_1, \mathbf{A})$

$\delta(q_1, b, B)=(q_1, \boldsymbol{\varepsilon})$

$\delta(q_1, a, C)=(q_1, \boldsymbol{\varepsilon})$

$\delta(q_1, \boldsymbol{\varepsilon}, z_0)=(q_f, \mathbf{z_0})$

Question

Convert following Grammar to PDA.

$S \rightarrow aABB \mid aAA$

$A \rightarrow aBB \mid a$

$B \rightarrow bBB \mid A$

$C \rightarrow a$

Convert the following grammar to PDA

$S \to aABB \mid aAA$

$A \to aBB \mid a$

$B \to bBB \mid A$

$C \to a$

Step1: All productions except the production $B \to A$ is not in GNF

So, by substituting for A in the above production we get B-productions also in GNF as shown below:

$B \to bBB \mid aBB \mid a$

Now, the new grammar which is in GNF is

$S \to aABB \mid aAA$

$A \to aBB \mid a$

$B \to bBB \mid aBB \mid a$

$C \to a$

Step2: $\delta(q_0, \epsilon, z_0) = (q_1, Sz_0)$

Step3:

Production	Transition
$S \to aABB$	$\delta(q_1, a, S) = (q_1, ABB)$
$S \to aAA$	$\delta(q_1, a, S) = (q_1, AA)$
$A \to aBB$	$\delta(q_1, a, A) = (q_1, BB)$
$A \to a$	$\delta(q_1, a, A) = (q_1, \epsilon)$
$B \to bBB$	$\delta(q_1, b, B) = (q_1, BB)$
$B \to aBB$	$\delta(q_1, a, B) = (q_1, BB)$
$B \to a$	$\delta(q_1, a, B) = (q_1, \epsilon)$
$C \to a$	$\delta(q_1, a, C) = (q_1, \epsilon)$

Step4: $\delta(q_1, \epsilon, z_0) = (q_f, z_0)$

So, the PDA M is given by

$$M = (Q, \Sigma, \Gamma, \delta, q_0, z_0, F)$$

$Q = \{q_0, q_1, q_f\}$

$\Sigma = \{a, b\}$

$\Gamma = \{S, A, B, C, z_0\}$

$q_0 = q_0$

$z_0 = z_0$, $F = \{q_f\}$

$\delta(q_0, \epsilon, z_0) = (q_1, Sz_0)$

$\delta(q_1, a, S) = (q_1, ABB)$

$\delta(q_1, a, S) = (q_1, AA)$

$\delta(q_1, a, A) = (q_1, BB)$

$\delta(q_1, a, A) = (q_1, \epsilon)$

$\delta(q_1, b, B) = (q_1, BB)$

$\delta(q_1, a, B) = (q_1, BB)$

$\delta(q_1, a, B) = \cancel{(q_1, BB)}\ (q_1, \epsilon)$

$\delta(q_1, a, C) = (q_1, \epsilon)$

$\delta(q_1, \epsilon, z_0) = (q_f, z_0)$

Pumping Lemma for CFL

Pumping Lemma for Context Free Language (CFL)

Let L be context free language and is infinite. Let **z** is sufficiently long string and **z** ∈ L ,

so that |**z**| >=n where n is some positive integer. If the string **z** can be decomposed into combination of strings

z=uvwxy

Such that |vwx| <= n , |vx| >=1 ,

then $uv^iwx^iy \in L$ for i=0,1,2,3,……

Using Pumping Lemma to show certain languages are not CFL

The general strategy used to prove that a given language is not CFL is shown below:

1. Assume that the language L is infinite and it is context free

2. Select string say **z** and break it into sub strings u, v, w, x and y such that |z|>=n,

z=uvwxy where |vwx| <= n , |vx| >=1

3. Find any i such that $uv^iwx^iy \notin L$. According to pumping lemma $uv^iwx^iy \in L$. So, the result is a contradiction to the assumption that the language is context free. Therefore, the given language L is not context free.

Question

Show that the language $L=\{a^n b^n c^n, n \geq 1\}$ is not Context Free Language (CFL).

Question

Show that the language $L=\{a^n b^n c^n, n\geq 1\}$ is not Context Free Language (CFL).

Solution:

Step1: Let L be CFL and let $z= a^n b^n c^n \in L$

Step2: Note that $|z|=| a^n b^n c^n |=3n >= n$

Split z into uvwxy such that $|vwx| \leq n$ and $|vx| \geq 1$

Question

Show that the language $L=\{a^n b^n c^n, n\geq 0\}$ is not Context Free Language (CFL).

Solution:

Step1: Let L be CFL and let $z= a^n b^n c^n \in L$

Step2: Note that $|z|=| a^n b^n c^n |=3n >= n$

Split z into uvwxy such that $|vwx| \leq n$ and $|vx| \geq 1$

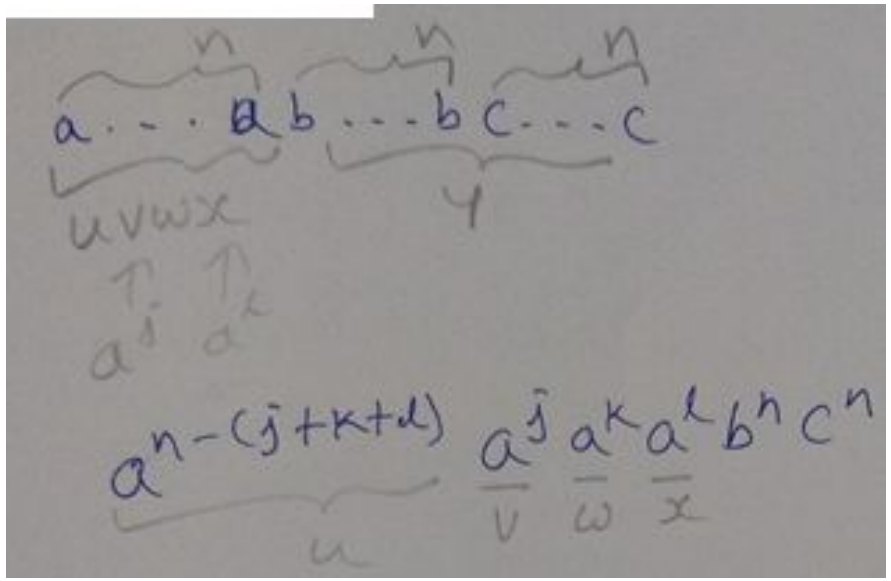

$|vx| =|a^j a^l|= (j+ l) \geq 1$

$|vwx| =|a^j a^k a^l|=(j+k+ l) \leq n$

Question

Show that the language $L=\{a^n b^n c^n, n\geq 0\}$ is not Context Free Language (CFL).

Solution (Contd…):

Step3: For all i, $uv^iwx^iy \in L$.

for $i=2$

$uv^2wx^2y \in L$

But $a^{n-(j+k+l)} (a^j)^2 a^k (a^l)^2 b^n c^n$

$= a^{n+j+l} b^n c^n \notin L$ $\therefore$ L is not CFL

Hence $L=\{a^n b^n c^n, n\geq 0\}$ is not CFL

Question

Show that the language L={WW , W ∈ (a+b)* }is not Context Free Language (CFL).

Show that the language L={WW , W ∈ (a+b)*} is not Context Free Language (CFL).
Rough Slide

Solution:

Step1: Let L be CFL and Let z= $a^n b^n a^n b^n$ ∈ L

Step2: Note that |z|=| $a^n b^n a^n b^n$ |=4n >= n

Split z into uvwxy such that |vwx| ≤ n and |vx| ≥ 1

② Show that the language
$L = \{w \mid w \in \{a,b,c\}^* \text{ where } n_a(w) = n_b(w) = n_c(w)\}$
is not context free

Soln: Take $L = \{a^n b^n c^n,\ n \geq 0\}$
(use the proof of previous problem)
since $L = \{a^n b^n c^n,\ n \geq 0\}$ is not CFL
$\therefore$ $L = \{w \mid w \in \{a,b,c\}^* \text{ where } n_a(w) = n_b(w) = n_c(w)\}$
is not context free.

③ Show that the language
$L = \{ww \mid w \in \{a,b\}^*\}$ is not context free

Step 1: Let $z = \{\underbrace{a^n b^n}_{w} \underbrace{a^n b^n}_{w} \in L$

Step 2: Since $|z| > n$, according to pumping lemma we can split z into u, v, w, x and y such that
$|vwx| \leq n$ and $|vx| \geq 1$

Step 3: $\forall i \geq 0$, $uv^i wx^i y \in L$

Let us consider the string vwx is within first a^n

Let $v = a^j$, $w = a^k$, $x = a^l$

$$\underbrace{\overbrace{a \cdots a}^{n}}_{uvwx} \underbrace{\overbrace{b \cdots b}^{n}\ \overbrace{a \cdots a}^{n}\ \overbrace{b \cdots b}^{n}}_{y}$$

$v = a^j$, $w = a^k$, $x = a^l$

Now, according to pumping lemma

$uv^2wx^2y \in L$ for $i=2$

$$\underbrace{a^{n-(j+k+l)}}_{u}\ \underbrace{a^{j}}_{v}\ \underbrace{a^{k}}_{w}\ \underbrace{a^{l}}_{x}\ b^n a^n b^n$$

$|vx| = |j+l| \geq 1$

$|vwx| = (j+k+l) \leq n$

for $i=2$

$$a^{n-(j+k+l)}\ a^{2j}\ a^{k}\ a^{2l}\ b^n a^n b^n$$

$a^{n+j+k+l}\ b^n\ a^n b^n \notin L$ $\therefore$ L is not context free

Question

Show that the language L={W , W ∈ (0+1)* , |w| is a perfect square }is not Context Free Language (CFL).

Show that the language L={W , W ∈ (0+1)* , |w| is a perfect square }is not Context Free Language (CFL).

Rough Slide

Solution:

Step1: Let L be CFL and Let $z= 0^{n2} \in L$

Step2: Note that $|z|=| 0^{n2}|=n^2 \geq n$

Split z into uvwxy such that $|vwx| \leq n$ and $|vx| \geq 1$

Step 3: For all i, $uv^iwx^iy \in L$.

Show that the language L={W , W ∈ (0+1)* , |w| is a perfect square }is not Context Free Language (CFL).

Rough Slide

Solution:

Step1: Let L be CFL and Let $z= 0^{n^2} \in L$

Step2: Note that $|z|=| 0^{n^2}|=n^2 \geq n$

Split z into uvwxy such that $|vwx| \leq n$ and $|vx| \geq 1$

Step 3: For all i, $uv^iwx^iy \in L$.

Let $|vx| = m$, $m \leq n$.

But for i=2,

$n^2 < |uv^2wx^2y| = n^2+m \leq (n^2 + n) < (n+1)^2$

And hence the length is nit a perfect square and therefore string is not in L. This contradiction allows us to conclude that our assumption was wrong and L is not CFL.

Question

Show that the language $L=\{a^{n!}, n\geq 0\}$ is not Context Free Language (CFL).

Solution:

Step1: Let L be CFL and it is infinite, Let $z= a^{n!} \in L$

Step2: Note that $|z|=|a^{n!}|=n! > n$

Split z into uvwxy such that $|vwx| \leq n$ and $|vx| \geq 1$

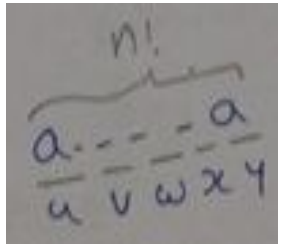

$a^{n!} = a^{n!-(j+k+l)}a^j a^k a^l$

$v=a^j$, $w=a^k$, $x=a^l$

$|vx| \geq 1$, $|a^j+a^l| =(j+ l)\geq 1$ $\quad$ $|vwx| \leq n$, $|a^j+a^k+a^l| =(j+k+ l) \leq n$

Question

Show that the language $L=\{a^{n!}, n\geq 0$ is not Context Free Language (CFL).

Solution (Contd..):

Step3: For all i, $uv^iwx^iy \in L$.

But for i=2,

$$a^{n!-(j+k+l)}a^{2j}a^{k}a^{2l} = a^{n!+j+l}$$

$$|a^{n!+j+l}| = n!+j+l \leq n!+n$$
$$< n!+n!(n)$$
$$< n!(n+1)$$

$$n! < (n!+j+l) < (n+1)!$$

Since, $(n!+j+l)$ lies in between n! and (n+1)! ,
the string generated by $uv^2wx^2y = a^{n!+j+l} \notin L$
which is contradiction, hence L is not CFL

Question

Pumping lemma for context free language breaks the strings into

a) Two parts

b) Three parts

c) Five parts

d) Six parts

Answer

Pumping lemma for context free language breaks the strings into

a) Two parts

b) Three parts

c) Five parts

d) Six parts

Question

In pumping lemma for context free language

a) We start by assuming the given language is context free and then we get contradict

b) We first convert the given language into regular language and then apply steps on

c) Both (a) and (b)

d) None of these

Answer

In pumping lemma for context free language

a) We start by assuming the given language is context free and then we get contradict

b) We first convert the given language into regular language and then apply steps on

c) Both (a) and (b)

d) None of these

Closure properties of CFL

Closure properties of CFL

- **Closure properties** consider operations on CFL that are guaranteed to produce a CFL
- The CFL's are closed under *union*, *concatenation*, *closure (star)*, *reversal*, *homomorphism*, *inverse homomorphism* and *substitution*.
- CFL's are **not** closed under *intersection and complementation*

CFLs are closed under Union Operation

- Let L_1 and L_2 be two CFL's generated by CFGs $G_1=(V_1, T_1, S_1, P_1)$ and $G_2=(V_2, T_2, S_2, P_2)$

CFLs are closed under Union Operation

- Let L_1 and L_2 be two CFL's generated by CFGs $G_1=(V_1, T_1, S_1, P_1)$ and $G_2=(V_2, T_2, S_2, P_2)$
- To get grammar for $L_1 \cup L_2$?
  - Add new start symbol S and rules $S \rightarrow S_1 \mid S_2$
  - We get grammar $G = (V, T, P, S)$ where

$V = V_1 \cup V_2 \cup \{ S \}$, where $S \notin V_1 \cup V_2$

$P = P_1 \cup P_2 \cup \{ S \rightarrow S_1 \mid S_2 \}$

CFLs are closed under Union Operation

- Let L_1 and L_2 be two CFL's generated by CFGs $G_1=(V_1, T_1, S_1, P_1)$ and $G_2=(V_2, T_2, S_2, P_2)$
- To get grammar for $L_1 \cup L_2$?
  - Add new start symbol S and rules $S \rightarrow S_1 \mid S_2$
  - We get grammar G = (V, T, P, S) where

    $V = V_1 \cup V_2 \cup \{ S \}$, where $S \notin V_1 \cup V_2$

    $P = P_1 \cup P_2 \cup \{ S \rightarrow S_1 \mid S_2 \}$
- Example:
  - $L_1 = \{ a^n b^n \mid n \geq 0 \}$, $L_2 = \{ b^n a^n \mid n \geq 0 \}$
  - $G_1 : S_1 \rightarrow aS_1b \mid \varepsilon$ $\quad G_2 : S_2 \rightarrow bS_2a \mid \varepsilon$
  - $L1 \cup L2$ is $G = (\{S_1, S_2, S\}, \{a, b\}, P, S)$ where

    $P = \{P1 \cup P2 \cup \{S \rightarrow S_1 \mid S_2 \}\}$
- Union of two CFLs results in CFL.

CFLs are closed under Concatenation Operation

- Let L_1 and L_2 be two CFL's generated by CFGs $G_1=(V_1, T_1, S_1, P_1)$ and $G_2=(V_2, T_2, S_2, P_2)$
- To get grammar for L_1L_2 ?
  - Add new start symbol S and rule $S \rightarrow S_1S_2$
  - We get $G = (V, T, P, S)$ where

    $V = V_1 \cup V_2 \cup \{ S \}$, where $S \notin V_1 \cup V_2$

    $P = P_1 \cup P_2 \cup \{ S \rightarrow S_1S_2 \}$
- Example:
  - $L_1 = \{ a^nb^n \mid n \geq 0 \}$ with G_1: $S_1 \rightarrow aS_1b \mid \varepsilon$
  - $L_2 = \{ b^ma^m \mid m \geq 0 \}$ with G_2 : $S_2 \rightarrow bS_2a \mid \varepsilon$
  - $L_1L_2 = \{ a^nb^{\{n+m\}}a^m \mid n, m \geq 0 \}$ with $G = (\{S, S_1, S_2\}, \{a, b\}, \{S \rightarrow S_1S_2, S_1 \rightarrow aS_1b \mid \varepsilon, S_2 \rightarrow bS_2a\}, S)$
- Concatenation of Two CFLs results in a CFL

CFLs are closed under Kleene's-Closure or Star-Closure Operation

- Let L_1 be the CFL generated by CFG $G_1=(V_1, T_1, S_1, P_1)$
- Kleene Star Closure $L(G)=(L(G_1))^*$
- Example:
  - $L_1 = \{a^n b^n \mid n \geq 0\}$

  $(L_1)^* = \{ a^{\{n1\}} b^{\{n1\}} \ldots a^{\{nk\}} b^{\{nk\}} \mid k \geq 0 \text{ and } ni \geq 0 \text{ for all } i \}$
- To get the grammar for $(L_1)^*$
  - Add new start symbol S and rules $S \rightarrow SS_1 \mid \varepsilon$.
  - We get $G = (V, T, P, S)$ where

    $V = V_1 \cup \{ S \}$, where $S \notin V_1$

    $P = P_1 \cup \{ S \rightarrow SS_1 \mid \varepsilon\}$

Context-free languages are not closed under Intersection

- Consider two CFL's

$L_1 = \{a^n b^n c^m, n \geq 0, m \geq 0\}$ and

$L_2 = \{a^n b^m c^m, n \geq 0, m \geq 0\}$

- But $L1 \cap L2 = \{a^n b^n c^n, n \geq 0\}$, which is not CFL
- Thus family of CFL's is not closed under Intersection operation.

Intersection

- The CFL's are not closed under intersection
- Example:
  - L = $\{0^n1^n2^n | n \geq 1\}$ is not context-free.
  - L1 = $\{0^n1^n2^i | n \geq 1, i \geq 1\}$, L2 = $\{0^i1^n2^n | n \geq 1, i \geq 1\}$ are CFL's with corresponding grammars for L1: S->AB; A->0A1 | 01; B->2B | 2 , and for L2: S ->AB; A->0A | 0; B->1B2 | 12.
  - However, $L = L_1 \cap L_2$
  - Thus intersection of CFL's is not CFL

Context-free languages are not closed under Complement

$$L_1 \cap L_2 = \overline{\overline{L_1} \cup \overline{L_2}}$$

- If the family of CFL's were closed under Complementation then the right side of the above expression would be a CFL for any L_1 and L_2. But this contradicts what we have just shown in previous slide that the intersection of two CFLs is not necessarily Context free.
- Consequently, the family of CFL is not closed under Complementation

Set Difference

- L_1 and L_2 are CFLs. $L_1 - L_2$ is not necessarily a CFL
  Proof:
  - $L1 = \sum^* - L$
  - $\sum^*$ is regular and is also CFL
  - But $\sum^* - L = L^C$
  - If CFLs were closed under set difference, then $\sum^* - L = L^C$ would always be a CFL.
  - But CFL's are not closed under complementation

Reversal

- The CFL's are closed under reversal
- This means then if L is a CFL, so L^R is a CFL
- It is enough to reverse each production of a CFL for L, i.e., substitute $A \rightarrow \alpha$ by $A \rightarrow \alpha^R$
- Example:
  - $L = \{ a^n b^n \mid n \geq 0 \}$ with $P : S \rightarrow aSb \mid \varepsilon$
  - $L^R = \{ b^n a^n \mid n \geq 0 \}$ with $P^R : S \rightarrow bSa \mid \varepsilon$

Homomorphism

- Closure under homomorphism of CFL L for every $a \in \sum$
- Suppose L is a CFL over alphabet $\sum$ and h is a homomorphism on $\sum$.
- Let s be a substitution that replaces every $a \in \sum$, by h(a). i.e., $s(a) = \{h(a)\}$.
- Then $h(L) = s(L)$.
- $h(L) = \{h(a_1)\ldots h(a_k) \mid k \geq 0\}$ where $h(a_k)$ is a homomorphism for every $a_k \in \sum$.

Inverse homomorphism

- To recall: If h is a homomorphism, and L is any language, then $h^{-1}(L)$, called an *inverse homomorphism,* is the set of all strings w such that $h(w) \in L$
- The CFL's are closed under inverse homomorphism.
- Theorem: If L is a CFL and h is a homomorphism, then $h^{-1}(L)$ is a CFL

Inverse homomorphism – proof

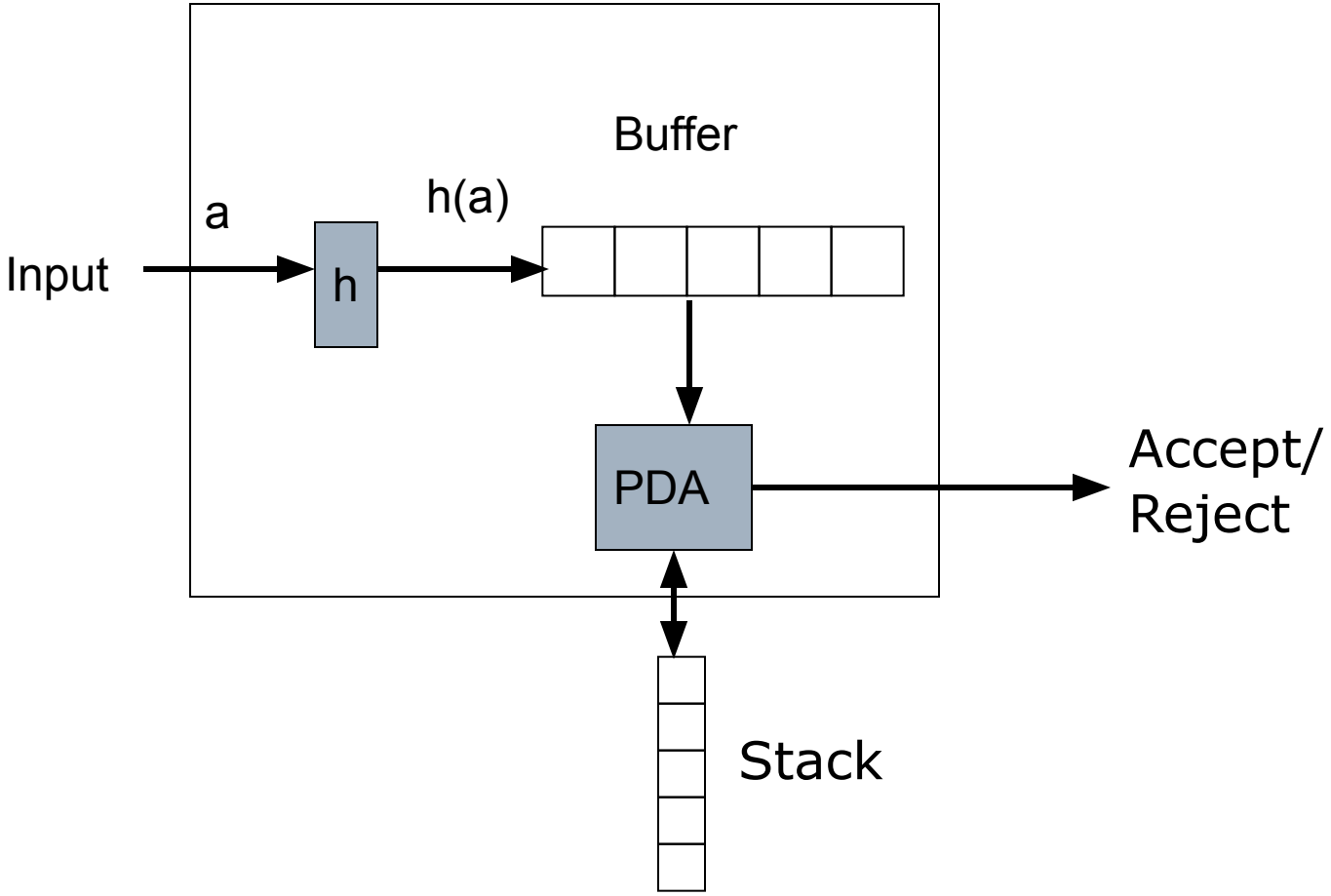

Proof Contd…

- After input a is read, h(a) is placed in a buffer.
- Symbols of h(a) are used one at a time and fed to PDA being simulated.
- Only when the buffer is empty does the PDA read another of its input symbol and apply homomorphism to it.

Proof Contd…

- Suppose h applies to symbols of alphabet Σ and produces strings in T*.
- Let PDA $P = (Q, T, \Gamma, \delta, q_0, Z_0, F)$ that accept CFL L by final state.
- Construct a new PDA $P' = (Q', \Sigma, \Gamma, \delta', (q_0, \varepsilon), Z_0, F \times \{\varepsilon\})$ to simulate language of $h^{-1}(L)$, where
  - Q' is the set of pairs (q, x) such that
    - q is a state in Q
    - x is a suffix of some string h(a) for some input string a in Σ

Proof Contd…

- δ' is defined by
  - $\delta'((q, \varepsilon), a, X) = \{((q, h(a)),a,X)\}$
  - If $\delta(q, b, X) = \{(p, \gamma)\}$ where $b \in T$ or $b = \varepsilon$ then $\delta'((q, bx), \varepsilon, X) = \{((p, x), \gamma)\}$
- The start state of P' is (q0, ε)
- The accepting state of P′ is (q, ε), where q is an accepting state of P.
- $(q_0,h(w),Z_0)$|-*P (p,ε,γ) iff $((q_0,\varepsilon),w,Z_0)$ |-*P′ $((p, \varepsilon), \varepsilon, \gamma)$
- P accepts h(w) if and only if P′ accepts w, because of the way the accepting states of P′ are defined.
- Thus $L(P')=h^{-1}(L(P))$

Intersection with RL

- Theorem: If L is CFL and R is a regular language, then L ∩ R is a CFL.

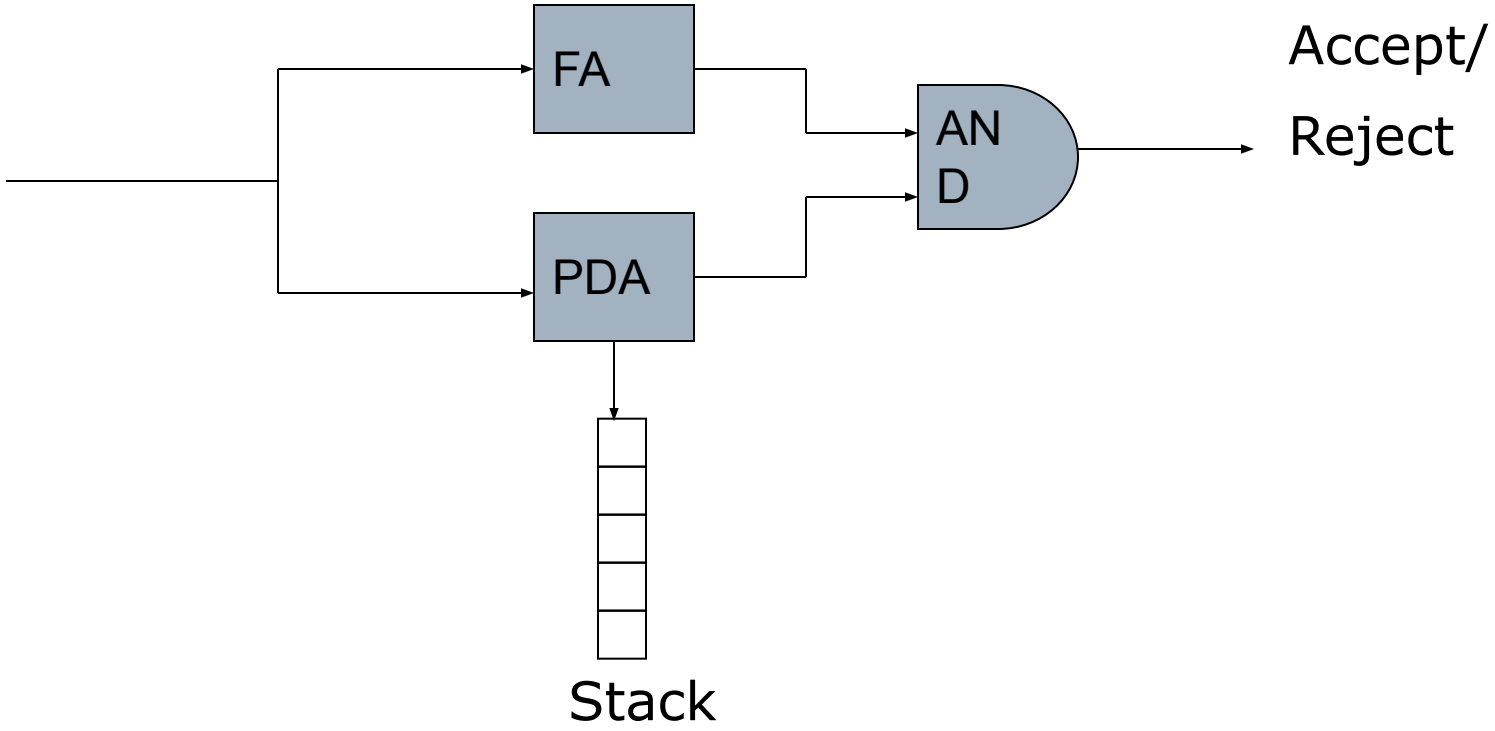

Intersection with RL Proof

- $P=(Q_P, \Sigma, \Gamma, \delta_P, q_P, Z_0, F_P)$ be PDA to accept CFL by final state
- $A=(Q_A, \Sigma, \delta_A, q_A, F_A)$ be a DFA for RL
- Construct PDA $P' = (Q, \Sigma, \Gamma, \delta, q_o, Z_0, F)$ where
  - $Q = Q_p \text{ X } Q_A$
  - $q_o = (q_p, q_A)$
  - $F = (F_P \text{ X } F_A)$
  - δ is in the form $\delta((q, p), a, X) = ((r, s), \gamma)$ such that
    1. $s = \delta_A(p, a)$
    2. (r, γ) is in $\delta_P(q, a, X)$

Proof Contd…

- For each move of PDA P, we make the same move in PDA P′ and also we carry along the state of DFA A in a second component of P′.
- P′ accepts a string w iff both P and A accept w.
- w is in $L \cap R$.
- The moves $((q_p, q_A), w, Z) \vdash^* P' ((q, p), \varepsilon, \gamma)$ are possible iff $(q_p, w, Z) \vdash^* P (q, \varepsilon, \gamma)$ moves and $p = \delta^*(q_A, w)$ transitions are possible.

Set Difference with RL

- For a CFL's L, and a regular language R.

  L - R is a CFL.

  Proof:
  - R is regular and R^C is also regular
  - $L - R = L \cap R^C$
  - Complement of Regular Language (R^C) is regular
  - Intersection of a CFL and a regular language is CFL
  - CFL and Regular language are closed under intersection.

Complementation

- L^C is not necessarily a CFL
- Proof:
  - Assume that CFLs were closed under complement.
  - If L is a CFL then L^C is a CFL
  - Since CFLs are closed under union, $\mathbf{L_1^C \cup L_2^C}$ is a CFL
  - And by our assumption $\mathbf{(L_1^C \cup L_2^C)^C}$ is a CFL
  - But $\mathbf{(L_1^C \cup L_2^C)^C = L_1 \cap L_2}$ which we just showed isn't necessarily a CFL.
  - Contradiction!

Substitution

- Each symbol in the strings of one language is replaced by an entire CFL language
- Useful in proving some other closure properties of CFL
- Example: $S(0) = \{a^n b^n \mid n \geq 1\}$, $S(1) = \{aa, bb\}$ is a substitution on alphabet $\Sigma = \{0, 1\}$.

Substitution

- **Theorem:** If a substitution s assigns a CFL to every symbol in the alphabet of a CFL L, then s(L) is a CFL.
- **Proof**
  - Let $G = (V, \sum, P, S)$ be grammar for L
  - Let $G_a = (V_a, T_a, P_a, S_a)$ be the grammar for each $a \in \sum$ with $V \cap V_a = \varphi$
  - $G' = (V', T', P', S)$ for s(L) where
    - $V' = V \cup V_a$
    - T' = union of T_a for all $a \in \sum$
    - P' consists of
      - All productions in any P_a for $a \in \sum$
      - In productions of P, each terminal a is replaced by S_a
- A detailed proof that this construction works is in the reader.
  - Intuition: this replacement allows any string in La to take the place of any occurrence of a in any string of L.

Example (1)

- $L = \{0^n 1^n | n \geq 1\}$, generated by the grammar $S \rightarrow 0S1 | 01$,
- $s(0) = \{a^n b^m | m \leq n\}$, generated by the grammar $S \rightarrow aSb | A$; $A \rightarrow aA | ab$,
- $s(1) = \{ab, abc\}$, generated by the grammar $S \rightarrow abA$, $A \rightarrow c | \varepsilon$
- Rename second and third S's to S_0 and S_1 respectively. Rename second A to B. Resulting grammars are:

  $S \rightarrow 0S1 \mid 01$

  $S_0 \rightarrow aS_0b \mid A$; $A \rightarrow aA \mid ab$

  $S_1 \rightarrow abB$; $B \rightarrow c \mid \varepsilon$

Example(1) Contd...

- In the first grammar replace 0 by S_0 and 1 by S_1. The combined grammar:

  $G' = (\{S, S_0, S_1, A, B\}, \{a, b\}, P', S)$,

  where $P' = \{S \rightarrow S_0SS_1 \mid S_0S_1,\ S_0 \rightarrow aS_0b \mid A,\ A \rightarrow aA \mid ab,\ S_1 \rightarrow abB,\ B \rightarrow c \mid \varepsilon\}$

Application of Substitution

- Closure under union of CFL's L_1 and L_2
- Closure under concatenation of CFL's L_1 and L_2
- Closure under Kleene's star (closure * and positive closure $^+$) of CFL's L_1
- Closure under homomorphism of CFL L_i for every $a_i \in \Sigma$

Thanks for Listening

Closure properties of CFG's

We show that context-free languages are closed under union, concatenation, and Kleene star. Suppose $G_1 = (V_1, \Sigma_1, R_1, S_1)$ and $G_2 = (V_2, \Sigma_2, R_2, S_2)$.

Example: For G_1 we have

$$S_1 \to aS_1b$$

$$S_1 \to \epsilon.$$

For G_2 we have

$$S_2 \to cS_2d$$

$$S_2 \to \epsilon.$$

Then $L(G_1) = \{a^n b^n : n \geq 0\}$. Also, $L(G_2) = \{c^n d^n : n \geq 0\}$.

1.1 Union

$G = (V_1 \cup V_2 \cup \{S\}, \Sigma_1 \cup \Sigma_2, R, S)$ where $R = R_1 \cup R_2 \cup \{S \to S_1, S \to S_2\}$ and S is a new symbol.

Then $L(G) = L(G_1) \cup L(G_2)$.

Example:

$$S_1 \to aS_1b$$

$$S_1 \to \epsilon.$$

$$S_2 \to cS_2d$$

$$S_2 \to \epsilon.$$

$$S \to S_1$$

$$S \to S_2$$

Then $L(G) = \{a^n b^n : n \geq 0\} \cup \{c^n d^n : n \geq 0\}$.

Closure properties of CFG's

1.2 Concatenation

$G = (V_1 \cup V_2 \cup \{S\}, \Sigma_1 \cup \Sigma_2, R, S)$ where $R = R_1 \cup R_2 \cup \{S \to S_1S_2\}$ and S is a new symbol.

Example:

$$S_1 \to aS_1b$$

$$S_1 \to \epsilon.$$

$$S_2 \to cS_2d$$

$$S_2 \to \epsilon.$$

$$S \to S_1S_2$$

Then $L(G) = \{a^m b^m c^n d^n : m, n \geq 0\}$.

1.3 Kleene star

$G = (V_1 \cup \{S\}, \Sigma_1, R, S)$ where $R = R_1 \cup \{S \to \epsilon, S \to SS_1\}$ and S is a new symbol.

Example:

$$S_1 \to aS_1b$$

$$S_1 \to \epsilon.$$

$$S \to \epsilon$$

$$S \to SS_1$$

Then $L(G) = \{a^n b^n : n \geq 0\}^*$.

Question

The context free languages are closed under:

a) Intersection

b) Complement

c) Kleene's-Closure

d) None of the mentioned

Question

The context free languages are closed under:

a) Intersection

b) Complement

c) **Kleene's-Closure**

d) None of the mentioned

Question

Context free languages are not closed under:

a) Intersection

b) Complement

c) All of the mentioned

Question

Context free languages are not closed under:

a) Intersection

b) Complement

c) **All of the mentioned**

Applications of Context Free Grammars (CFG)

YACC (Yet Another Compiler-Compiler)

Mark up language (HTML)

XML (Extensible Markup Language)